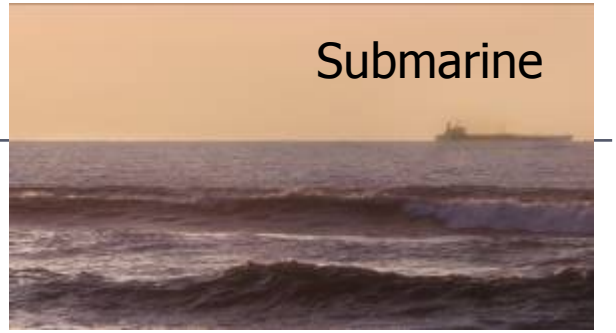

The future of Submarine Systems
Where Do Upgrades Fit?

Tony Frisch and Sumudu Edirisinghe, Xtera Communications

Contents

Focuses on Third Party upgrades
of Long-span Repeatered submarine systems

- Background
- Upgrade Issues for legacy systems
- Constraints for increasing the data rates
- Potential advances for future cable systems
- Potential upgrade opportunities on new cables
- Conclusions

Where do Third Party Upgrades fit?

- What? Modification of the system to add capacity/functionality
- When? After the initial construction of the system
- Why? Opportunism
  Better features from the competitor
  To create competitive pressure
- Why not? Submarine-specific requirements/features
  - E.g. terrestrial suppliers generally cannot monitor submerged repeaters
- Who? Anyone other than the original supplier
  Providing they can offer the correct solution – so far mainly submarine specialists

… Recently several non-specialists e.g. Nortel, Infinera, Huawei are showing interest in this market

Why Third Party Upgrades work

- Surely the initial supplier is best positioned?
  - Knowledge
  - Footprint
  - Simple installation
  - Upgrade needs to be coupled
    Unless it's on a dark fibre

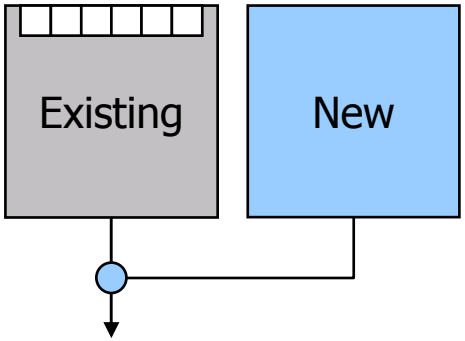

- Exceptions are:
- Initial supplier may be out of business
- Existing equipment may no longer be supplied
- Upgrade may be of low interest to initial manufacturer
- Upgrade supplier may offer more
  - Better capacity
  - Better features
  - Better price / delivery

What about System Warranty?

- Usually expires after 5 years, so may not apply
- Risk is low because:
  - Submerged plant is very reliable
  - Terminal equipment is electrically isolated from the power feed
  - Terminal equipment produces relatively low power at the repeater

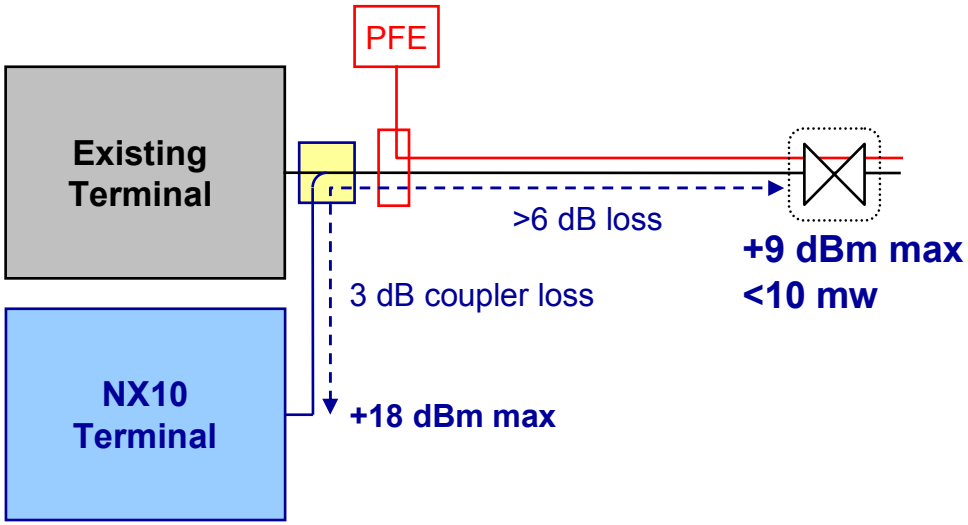

- Bad business to seek to void warranty without a good reason ...

Transatlantic Capacity Growth

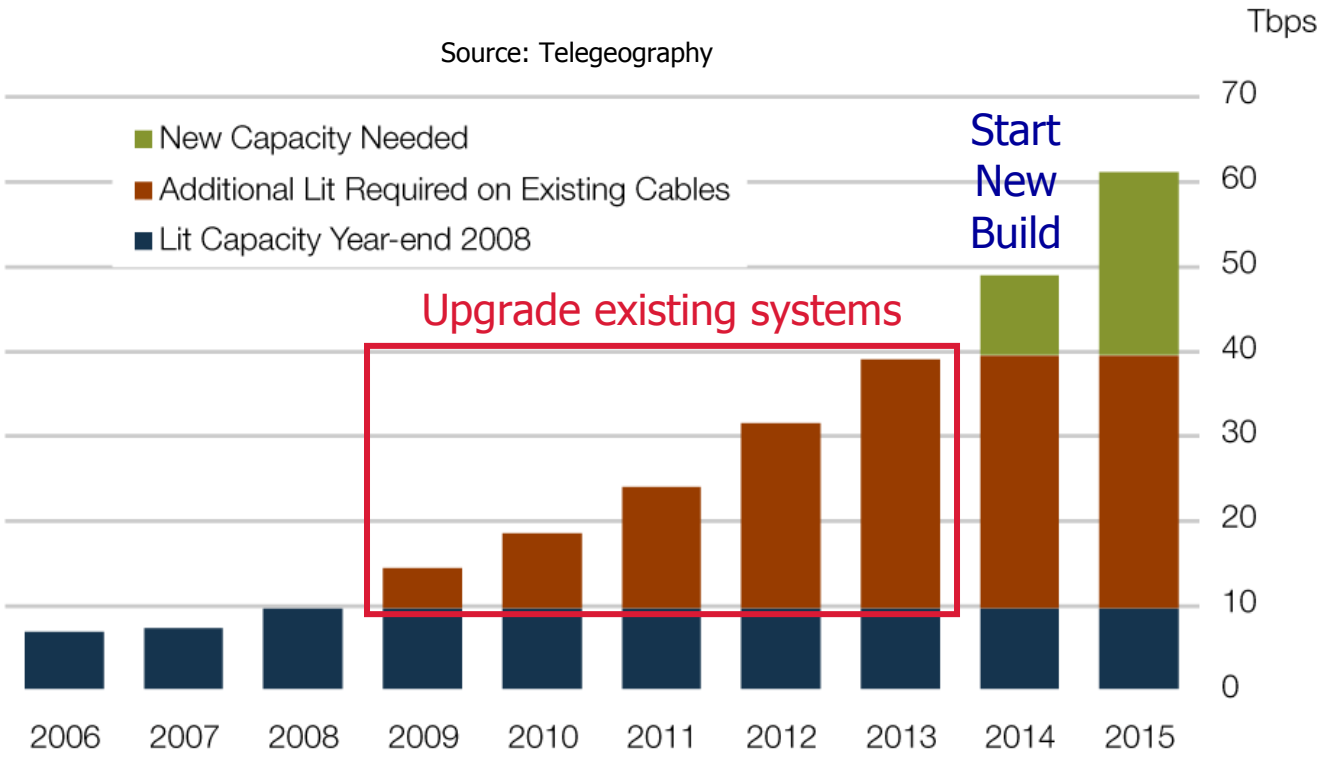

Two targets:

- Upgrade existing systems
- Upgrade new systems

Growth – the major driver

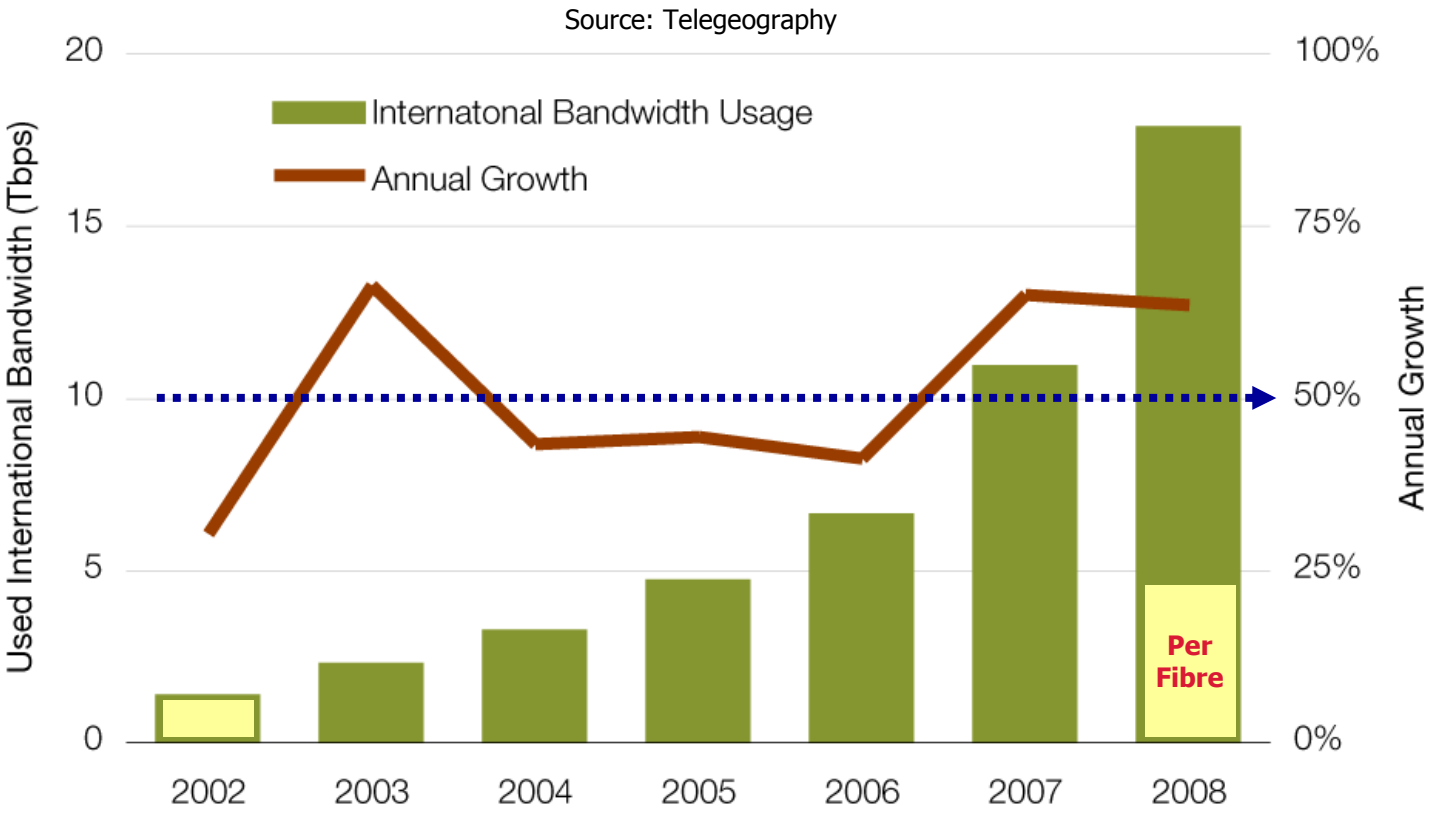

- Total capacity increased ~12x
- Capacity per fibre increased ~3x

Anatomy of a submarine system

- Cable
- Powering
- Monitoring

} little major innovation recently

- Amplifier — larger bandwidth, more output power
- Fibre — larger core, different dispersion maps
- Terminal — higher line-rates , improved FEC, adjustable dispersion compensation, DPSK ...

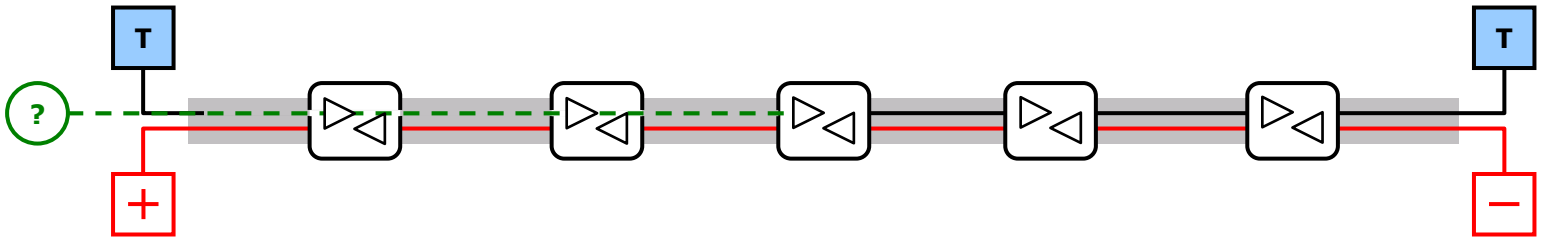

Initial Design Constraints

- Wet parts are very expensive to develop
  - Reluctance to change the design without a compelling reason
- Wet parts are very expensive to replace
  - Need to be reliable
  - Reluctance to replace them as part of an upgrade
  - Fault location a critical need
    - Simple for cable breaks — using DC fault location
    - More difficult for amplifier faults — needs a specialist solution

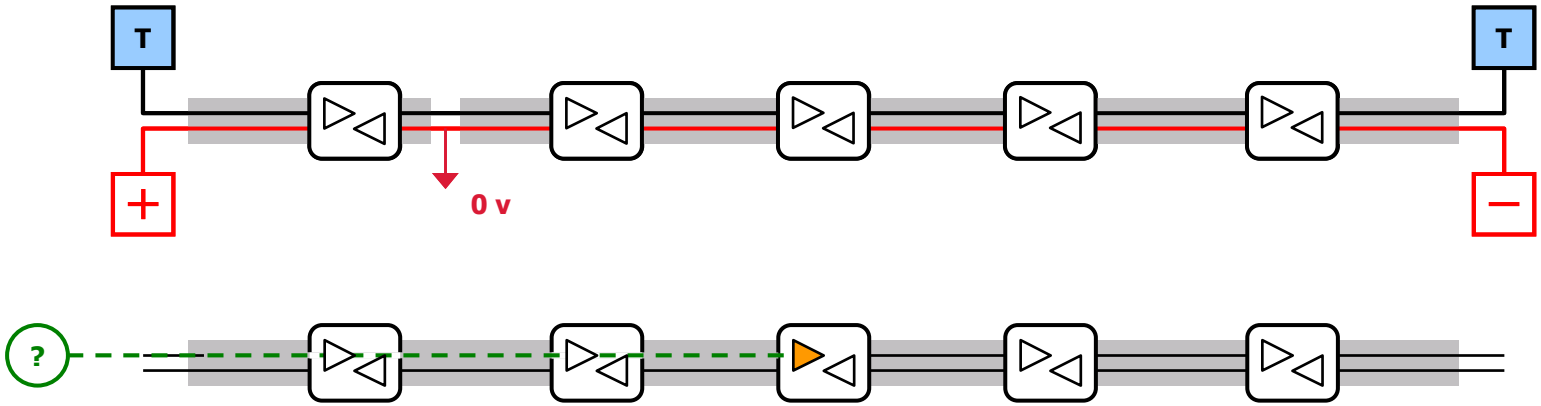

How can one detect which amplifier is faulty?

Upgrade Constraints

- Wet parts are very expensive to access
  - Changing repeaters VERY expensive
  - Adding equalisers Expensive, but more realistic? yet to be done …
  - Disrupts traffic

- Moving the complete system Quite popular
  - Cheaper than buying a new system
- Most cost-effective is to replace terminal equipment
  - Low / no disruption to traffic
  - May be able to retain existing terminal equipment
- Station by-pass Increasing popularity
  - Provides more flexibility to carriers

- Needs a good understanding of the line characteristics

Line Characteristics

- Amplifier
  - Bandwidth / Gain shape
  - Power out
  - Noise factor
  - Supervisory type
- Fibre map
  - Attenuation
  - Dispersion
  - Dispersion slope
  - Lengths
- Existing traffic
  - Wavelengths
  - Power levels
  - Rate / Format
  - Performance

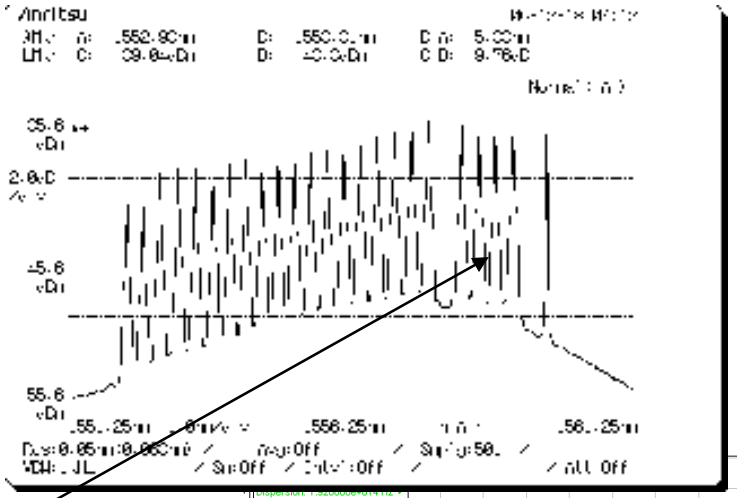

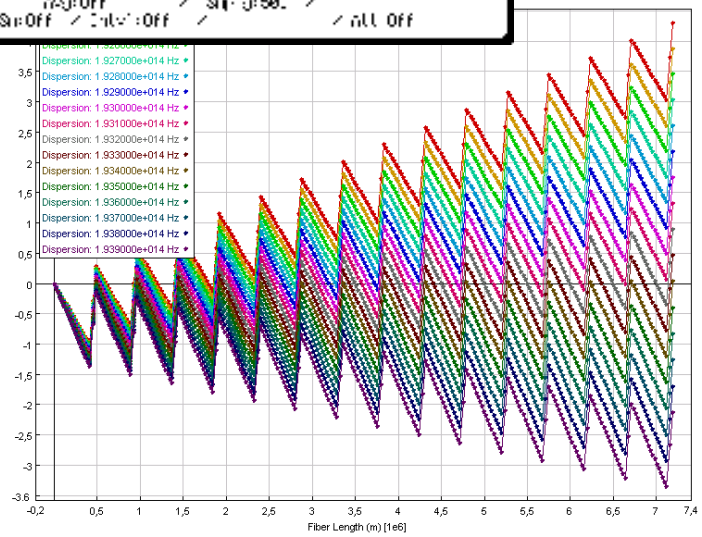

Line Shaping

- Equalisers
  - Passive
  - Active (adjustable)

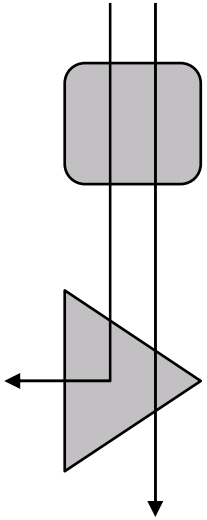

To flatten gain

- Branching Units
  - Fibre-splitting
  - Wavelength Selective
  - Coupler based

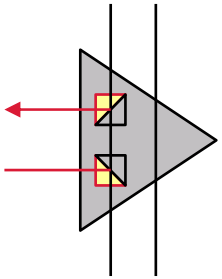

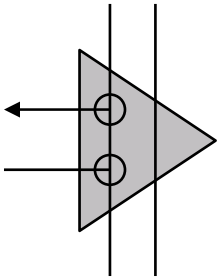

- Trend is towards simplicity?

- Need to understand
  - Wavelength Selectivity
  - Control
  - Monitoring

Unrepeatered, Terrestrial, Repeatered [OLD]

- Different solutions for handling chromatic dispersion

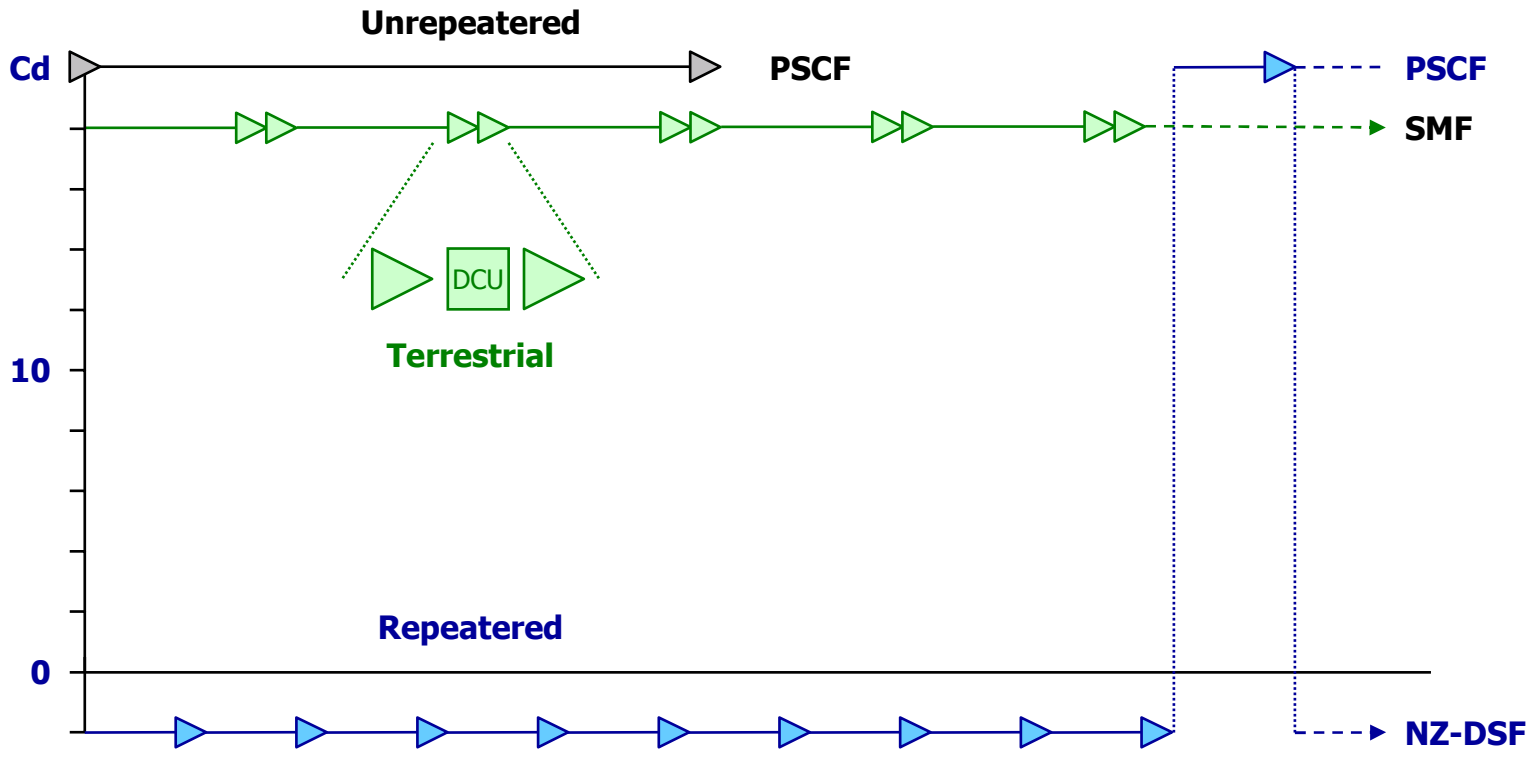

- Longer spans make non-linear effects more significant
- Generally need different solutions for submarine and terrestrial

Dispersion as a barrier to competition

- Long spans make dispersion an issue
- Example of residual dispersion

– Cd'	0.1	ps/km/nm^2	Typical values
– Length	6000	km	
– WL offset	5	nm	
=	3000	ps/nm	

- Different for different wavelengths / bands
- Significantly more than for a typical terrestrial system

Technical Differences

- 40 Gb/s, and higher, solution in all cases, using Dual Polarisations of lower rate signals

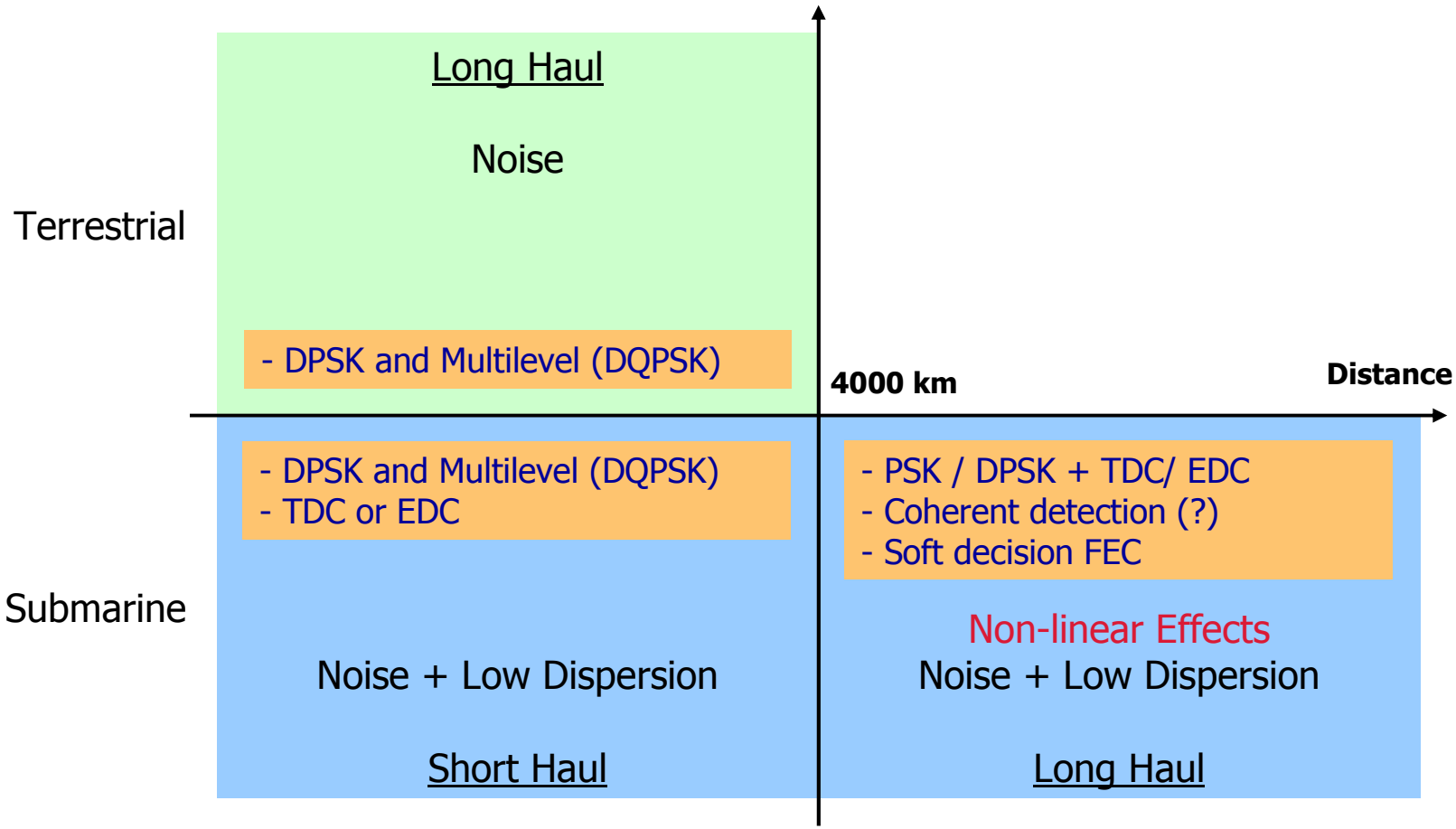

40Gb/s Performance on legacy submarine systems

Bitrate/Modulation	Channel spacing/ GHz	Performance
42.8 Gb/s DPSK, DD	100	Poor
42.8 Gb/s DQPSK, DD	50	
42.8 Gb/s QPSK HD	50	
42.8 Gb/s POLMUX DPSK DD	50	
42.8 Gb/s POLMUX DPSK T/2 DD	50	
21.4 Gb/s DPSK, DD	50	
42.8 G POLMUX DPSK T/2 HD	50	Good

Over 6750km Submarine link with LEAF & LS fibre

DD = Direct Detection, HD = Homodyne Detection

Legacy verses future systems

- Upgrading long span legacy systems over 4000km to higher data rates seems challenging
  - Moving to 40Gb/s over trans-Atlantic distances will require 2 x 20Gb/s or 4 x 10Gb/s
  - Coherent detection may not work well with DSF and NZ-DSF links due to nonlinear effects

- However, for new builds there is increasing pressure to move to 40Gb/s and 100Gb/s data rates
  - Needs cables designed for large bandwidths and minimal non-linear effects
  - Modulation and detection schemes capable of delivering 100Gb/s would dictate the fibre types
  - Coherent detection would offer more functionality
    - Mitigation of propagation effects using DSP
    - Better coding gains through soft decision

More fibre pairs, more bandwidth

- Higher Bandwidth?
- C + L band EDFA
  - More complex
  - More pumps
  - More power needed

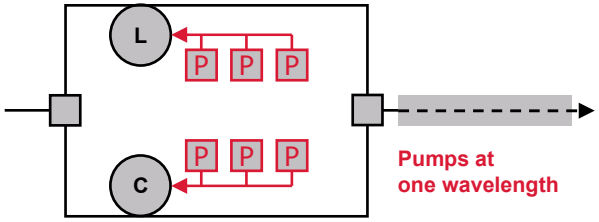

- Raman Amplifier
  - Complex control
  - More pumps
  - More power needed

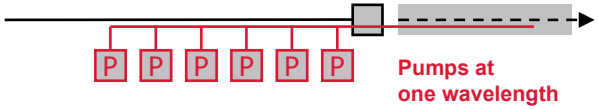

- Is there a benefit compared with 2 fibres?
  - Economic?
  - Reliability?

- Power / reliability could be the key limit to capacity

Repeatered [NEW]

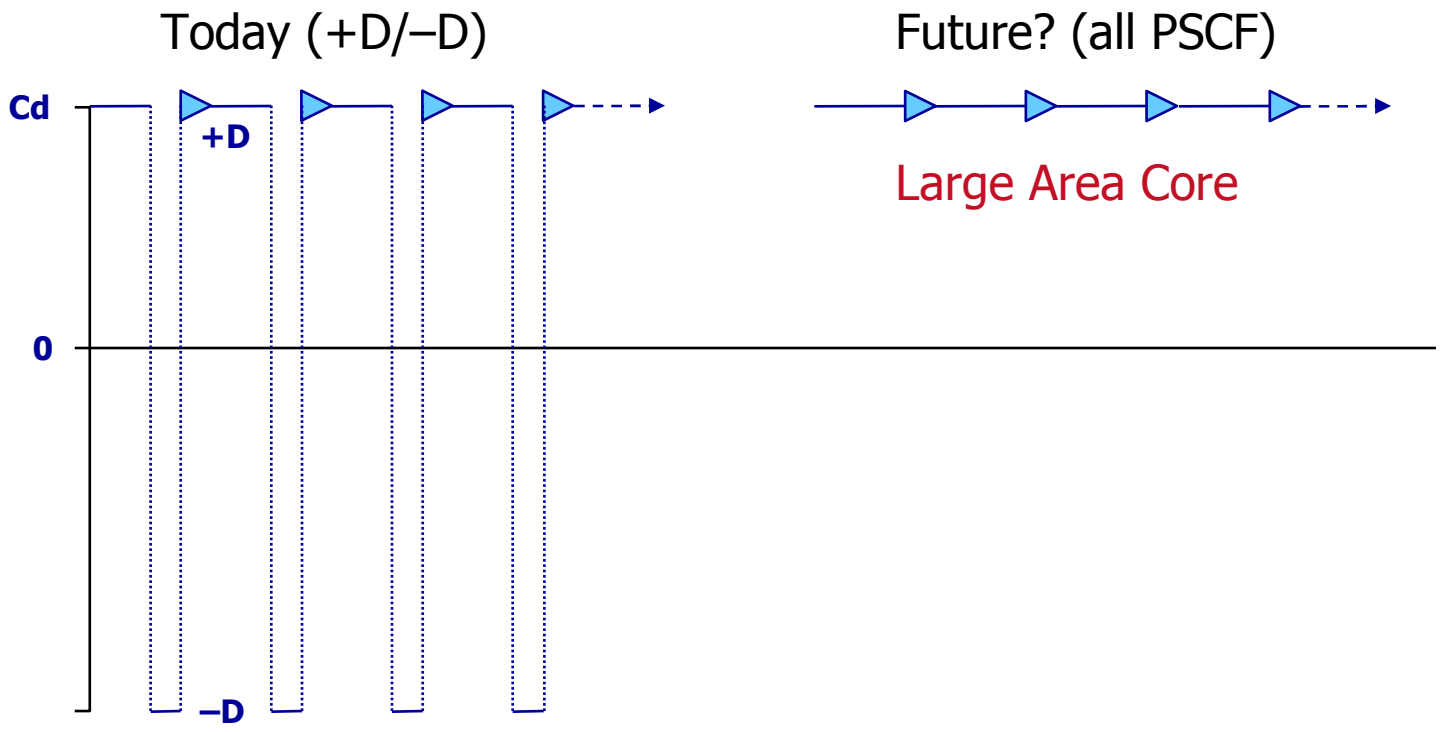

- +D/–D reduces Cd and non-linear effects; expensive and makes repairs quite complex?
- All PSCF an even better solution?

All PSCF Fibre

- Long spans make dispersion very large
  - Cd ~20 ps/km/nm
  - Length 6,000 km
  - Dispersion 120,000 ps/nm
- Only practical with Electronic Dispersion Compensation (EDC)

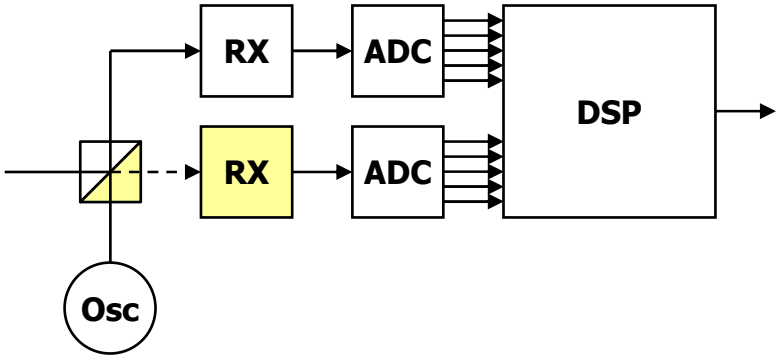

- Most suppliers currently selling direct detection DPSK
  - High-speed ADC and DSP not trivial developments
  - Some questions regarding coherent benefit on long spans

FEC limits

- Simple binary codes are close to reaching the theoretical limits

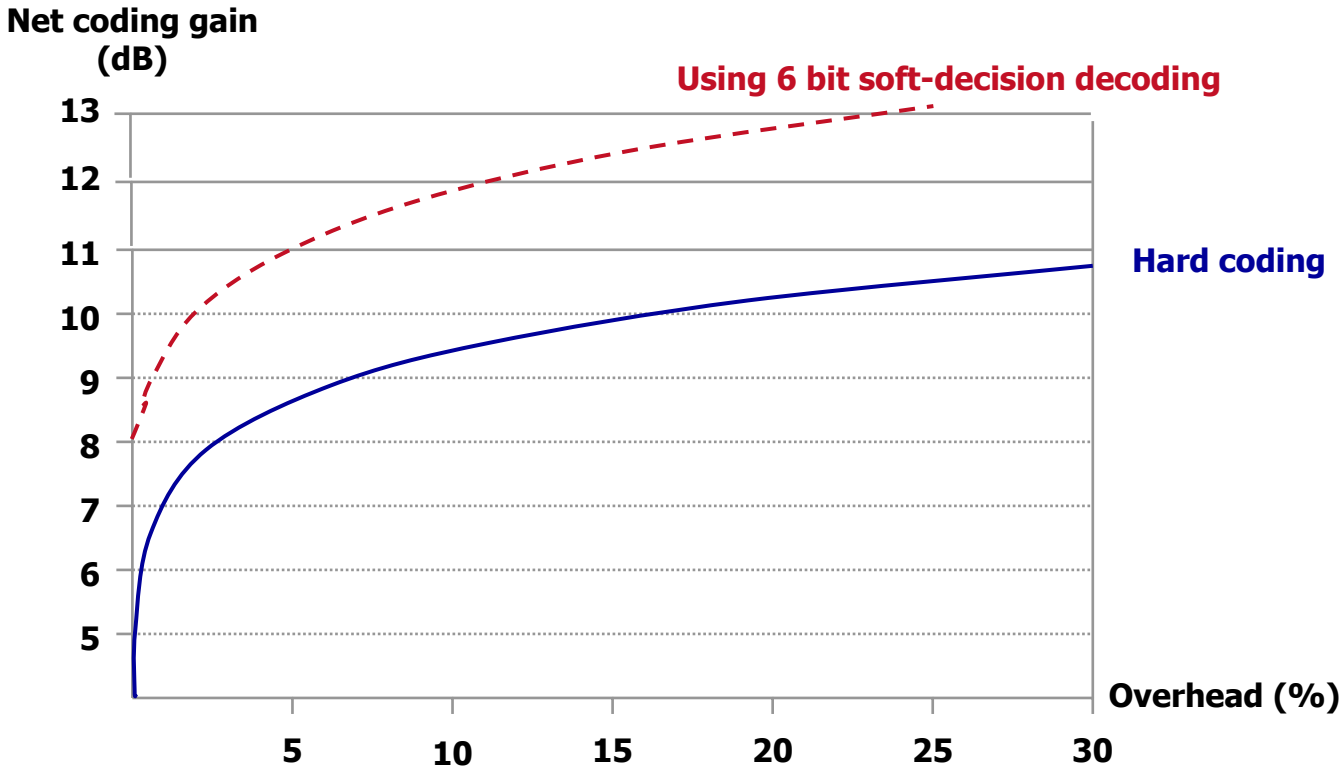

- Soft-decision gives theoretical improvement of up to 3 dB
- Requires high-speed ADCs – more complex coding/decoding

Higher level formats

- Needed to avoid the need for higher line-rates

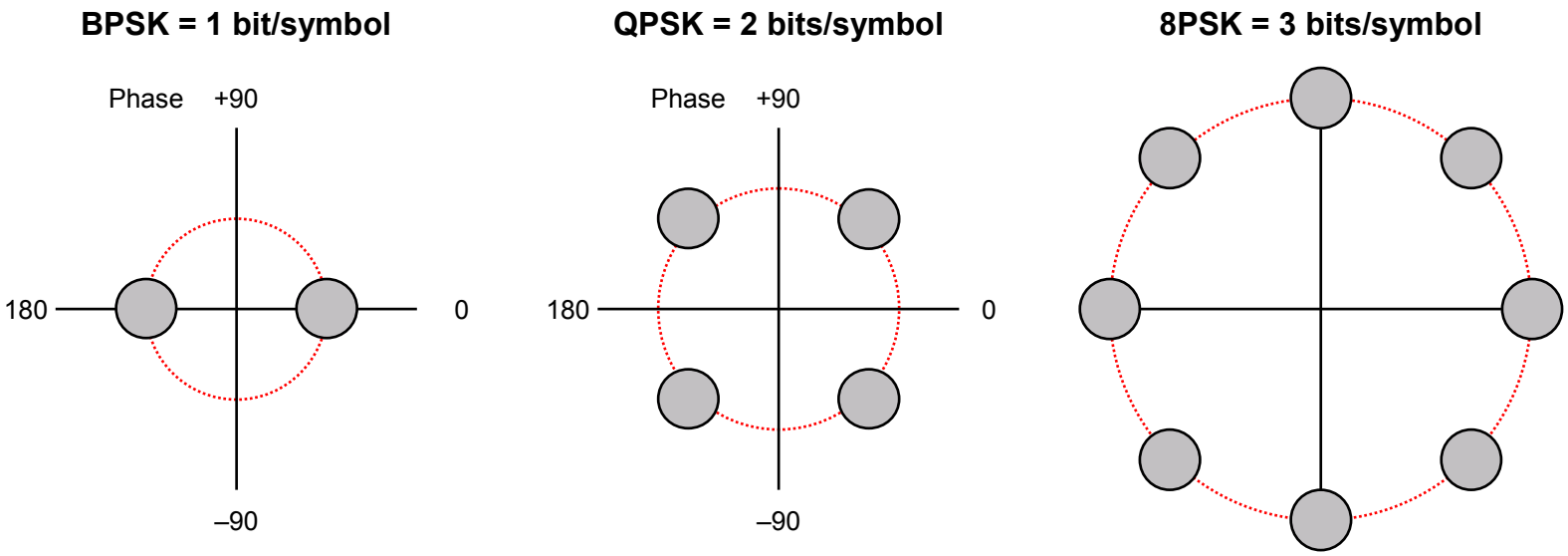

- More levels = more power
- More levels + more power = problems with non-linear distortion

- More levels = more processing = more complexity

Will upgrades be viable in the future?

- If future systems evolve towards uncompensated PSCF systems then,
  - Coherent detection + DSP will be the most viable technique
  - The upgrade market will become very competitive
  - System design should be simpler

- The upgrade business will thrive if upgrade vendors offer
  - Compatible equipment providing 40Gb/s and 100Gb/s at competitive prices
  - With extra functionality and superior service

- Carriers interested in third party upgrades
  - To maintain a competitive environment
  - To stimulate innovative advances
  - To cover the possibility that a supplier goes out of business or a product becomes obsolete

Summary

- Moving to 40/100 Gbaud line rates on long submarine links proves to be challenging
- Higher capacity per fibre pair will use binary/quaternary formats rather than 40/100 Gbaud line-rates
  Also likely to use polarisation multiplexing
- Choice of format / line-rate depends on target system
- Single, low-loss, large area, high-dispersion fibre map appears attractive for future deployments
- ADC and DSP technology is likely to be a key enabler
  - Expensive development
  - Will not happen quickly

- A lot of potential changes, opportunities and challenges for upgrade suppliers as the target system evolves

Acknowledgements

- Carl Weinert, Lutz Molle, Ronald Freund from HHI, Berlin, Germany

Fraunhofer Institut Nachrichtentechnik Heinrich-Hertz-Institut

- Joerg Schwartz, Xtera Communications, UK

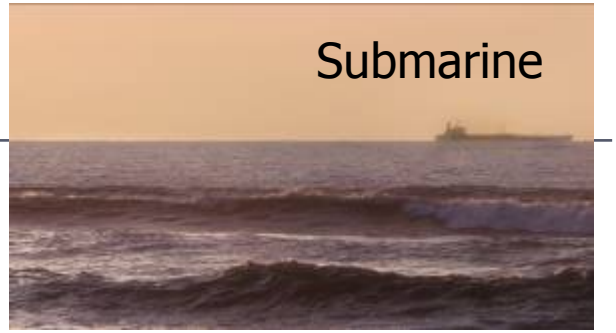

XTERA®

Thank you for listening

Any Questions?