Iterative Equalisation and Forward Error Correction

R. Urbansky

University of Kaiserslautern, Germany, Communications Engineering

ECOC 2009, Workshop "DSP & FEC: Towards the Shannon Limit"

Outline

- FEC, Viterbi Equalisation and Channel Capacity
- Turbo Equalisation (TE)
- Low-Density Parity-Check (LDPC) Codes and TE
- Equalisation and FEC in OFDM Systems

Fibre-Optical Transmission System

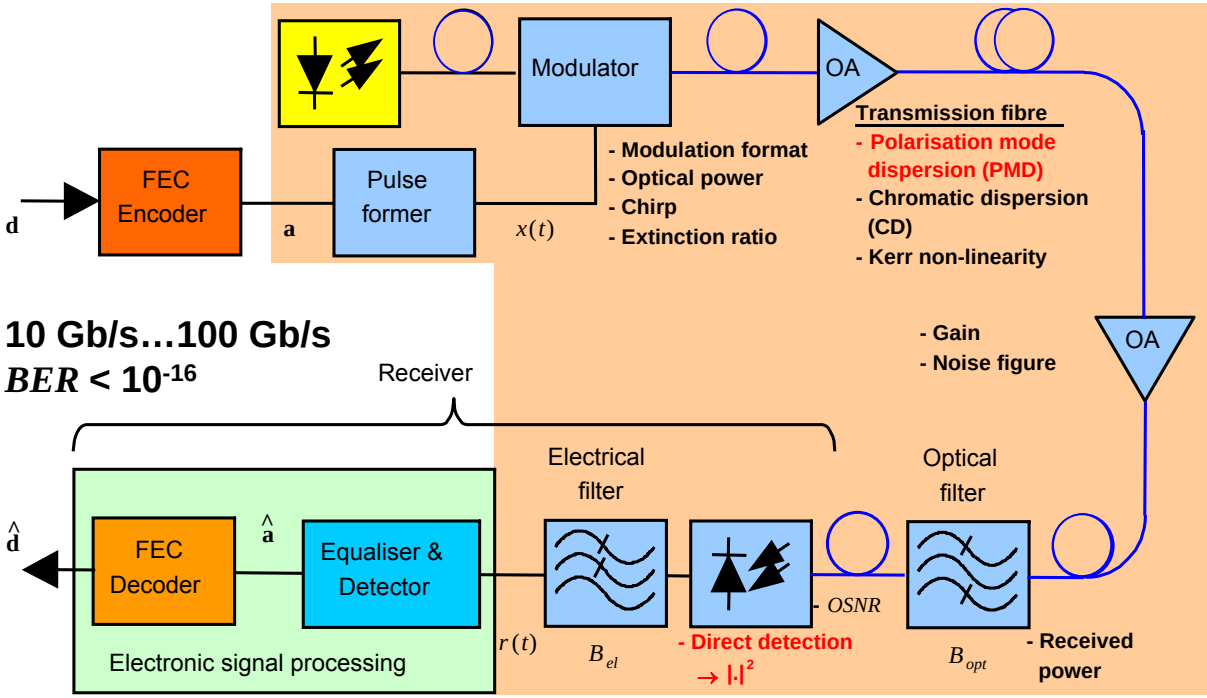

- **10 Gb/s…100 Gb/s**
- ***BER*** **< 10^{-16}**

- **Chromatic dispersion (CD)**
  group velocity dispersion (GVD)
- **Polarisation mode dispersion (PMD)**
  differential group delay (DGD)
- **Amplified spontaneous emission (ASE) noise and other noise**
- **Self phase modulation (SPM) and cross phase modulation (XPM) noise**

Forward Error Correction (FEC) Coding

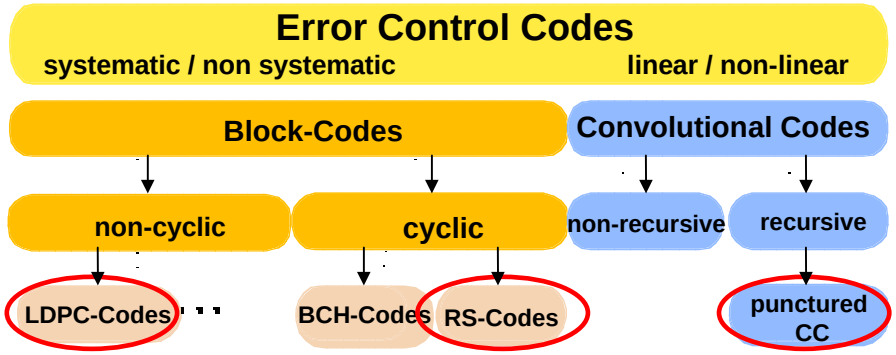

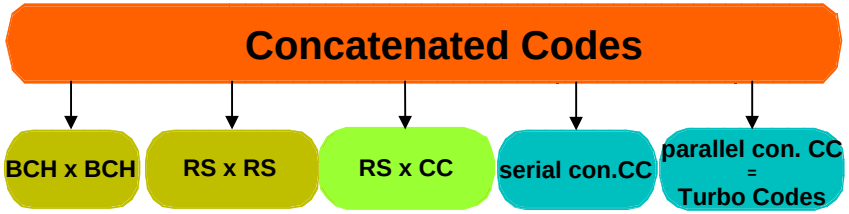

Net coding gain (NCG)
for code rate R=0.93 @ BER=10^{-16}

First generation FEC:
- *RS(255,239): NCG = 6.3 dB*
- *RS(2720,2550): NCG = 8.2 dB*

Concatenated codes:
- *RS(255,245) x RS(246, 240): NCG = 9.0dB*
- *BCH(2040, 1930) x BCH(3860,3824): NCG = 9.3dB*

LDPC codes:
- *LDPC(32640,30595), hard, bit-flip: NCG = 8.2dB*
- *LDPC (32640,30595), soft, Sum Prod.Alg.: NCG = 9.7dB*

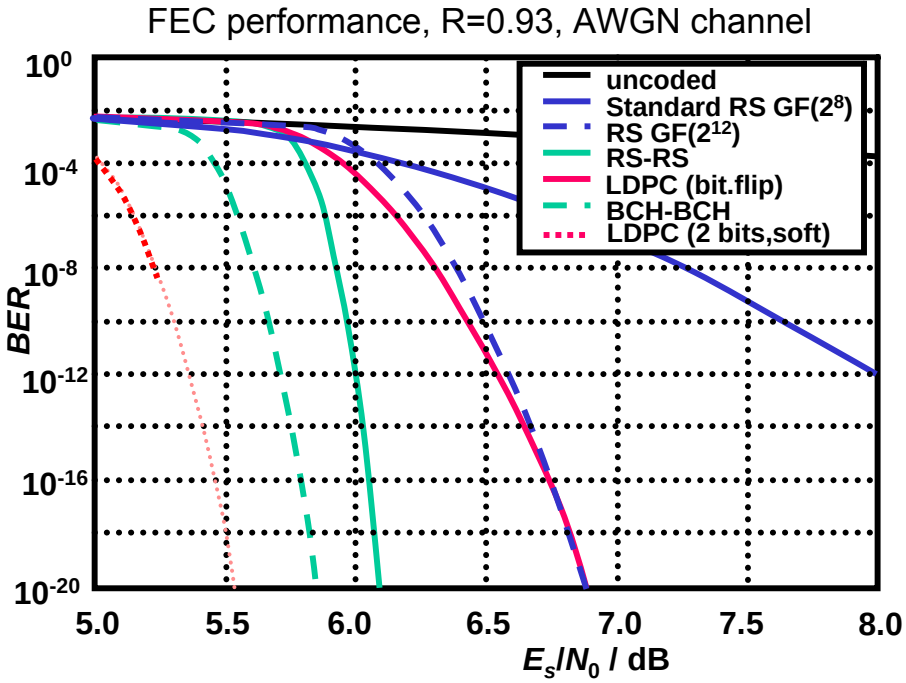

System Concept I

Standard equalisation and decoding: separated FEC decoding and equalisation for channel dispersion

- suboptimum receiver

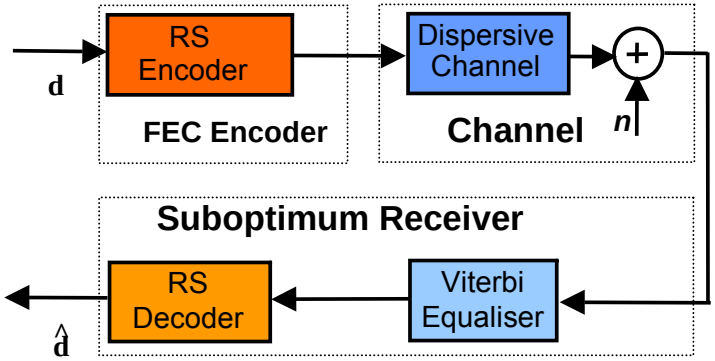

System Concept II

Standard equalisation and decoding: separated FEC decoding and equalisation for channel dispersion

- suboptimum receiver

Optimum equalisation and decoding: over-all maximum-likelihood decoding of combined FEC and dispersion code

- too complex for implementation at 10 Gb/s…100 Gb/s and $BER < 10^{-16}$

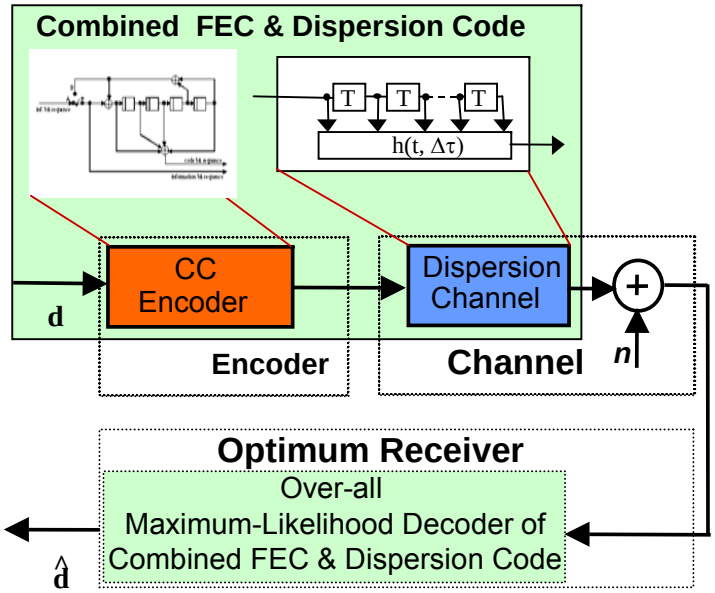

System Concept III

Standard equalisation and decoding: separated FEC decoding and equalisation for channel dispersion

- suboptimum receiver

Optimum equalisation and decoding: over-all maximum-likelihood decoding of combined FEC and dispersion code

- too complex for implementation at 10 Gb/s…100 Gb/s and $BER < 10^{-16}$

Approach:

- iterative equalisation and decoding = *Turbo Equalisation* (TE)
  - punctured convolutional code (CC)
  - low-density parity-check (LDPC) code
- demanding for $BER << 10^{-4}$

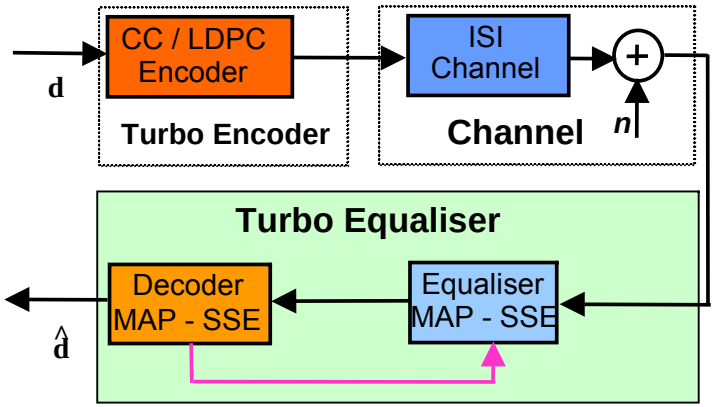

System Concept IV

Standard equalisation and decoding: separated FEC decoding and equalisation for channel dispersion

- suboptimum receiver

Optimum equalisation and decoding: over-all maximum-likelihood decoding of combined FEC and dispersion code

- too complex for implementation at 10 Gb/s…100 Gb/s and $BER < 10^{-16}$

Approach:

- iterative equalisation and decoding = *Turbo Equalisation* (TE)
  - punctured convolutional code (CC)
  - low-density parity-check (LDPC) code
- TE with outer Reed-Solomon (RS) code

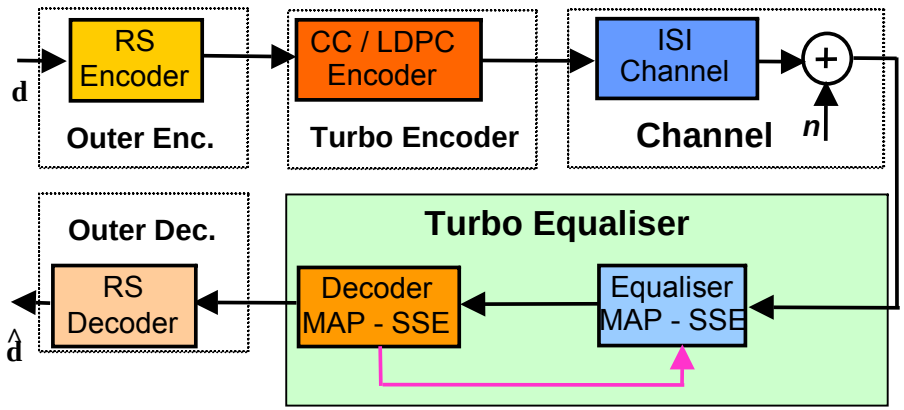

outer code rate $R_{RS} \approx 0.93$

inner code rate $R_{TE} \approx 0.97$

total code rate $R = R_{TE} \cdot R_{RS} \approx 0.9$

Performance Bounds of a Simplified DGD Channel Model

- Linear approximation of DGD cannel, $0 \le \Delta\tau/T \le 2$: impulse response (T spaced) according to [*] (worst-case channel model)

$$\mathbf{h} = \left[\tfrac{1}{2}\cos^2\left(\tfrac{\pi}{4}\left(2+\tfrac{\Delta\tau}{T}\right)\right), \cos^2\left(\tfrac{\pi}{4}\tfrac{\Delta\tau}{T}\right), \tfrac{1}{2}\cos^2\left(\tfrac{\pi}{4}\left(2+\tfrac{\Delta\tau}{T}\right)\right)\right]$$

with chi-square noise

[*] Jäger, Speidel, Bülow et al., *JLT*, vol. 24, pp.1226-1235, Mar. 2006

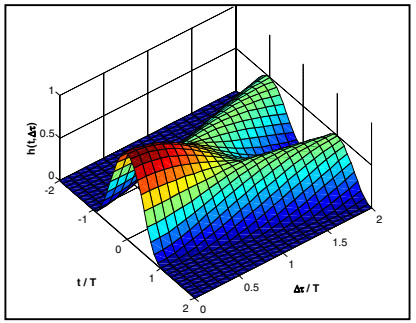

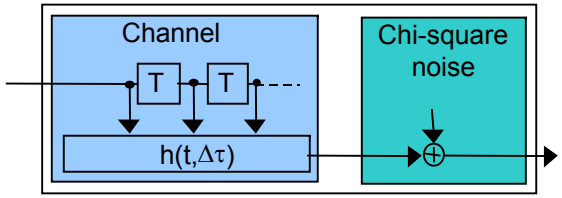

- Mutual information $I(X;Y)$ to calculate performance bounds independent of equaliser implementation

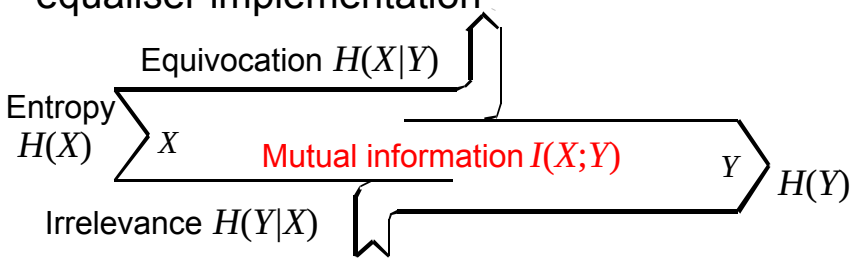

- Channel Coding Theorem: for quasi error free decoding, an FEC code is required with overall code rate $R \le I(X;Y)$

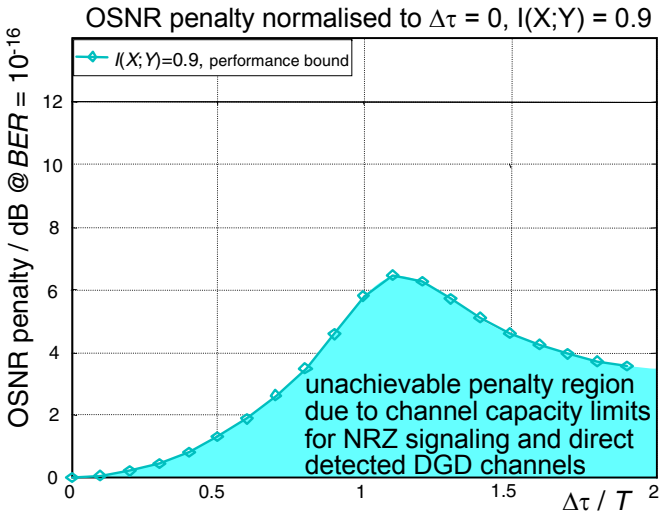

Viterbi Equalisation Using Outer FEC Code

Maximum Likelihood Sequence Estimation (MLSE)

= Viterbi equaliser (VE)

- Probabilistic channel model used for metric calculation

  $f\ \ r(t)\,|\,\mathbf{a}_1\ \ ,\ldots,\ f\ \ r(t)\,|\,\mathbf{a}_{2^{L\ 1}}$

- Channel estimation by adaptive histogram methods

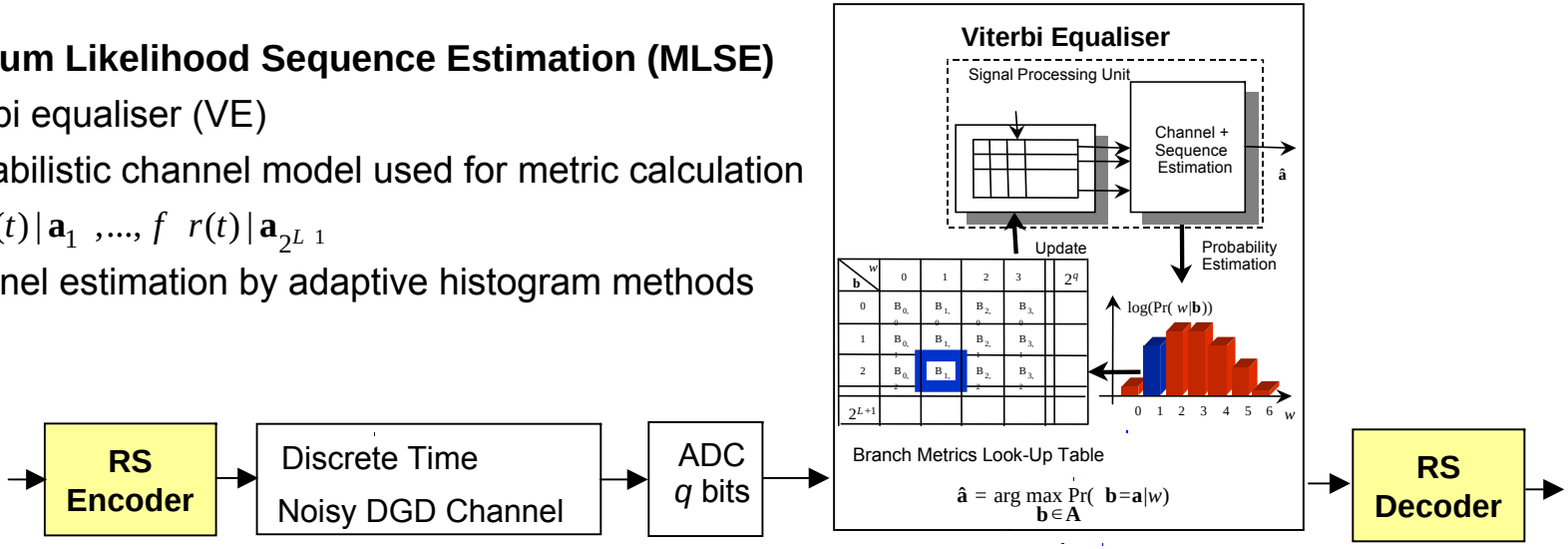

- Outer RS(255,239) code for BER=10^{-16}
- VE (4 states), *q*=4 bit ADC, *T*-spaced log-likelihood lookup-table, histogram-based adaptation
- Gap to mutual information bound: 6 dB

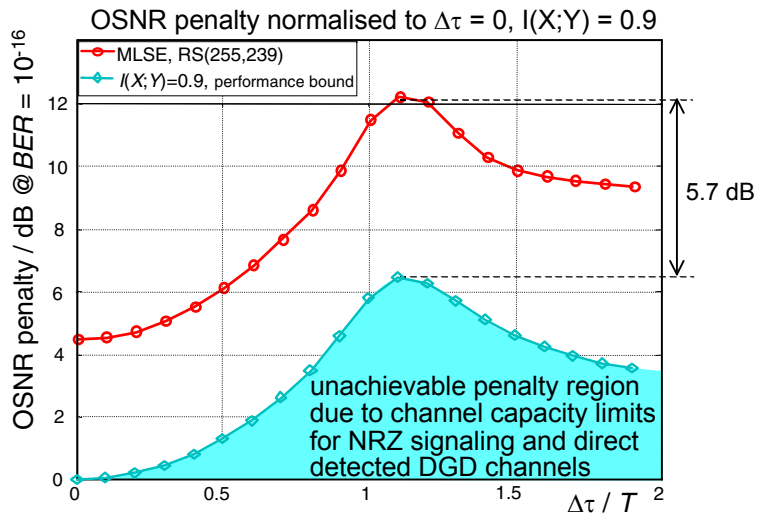

Turbo Equalisation with Punctured Convolutional Code (CC)

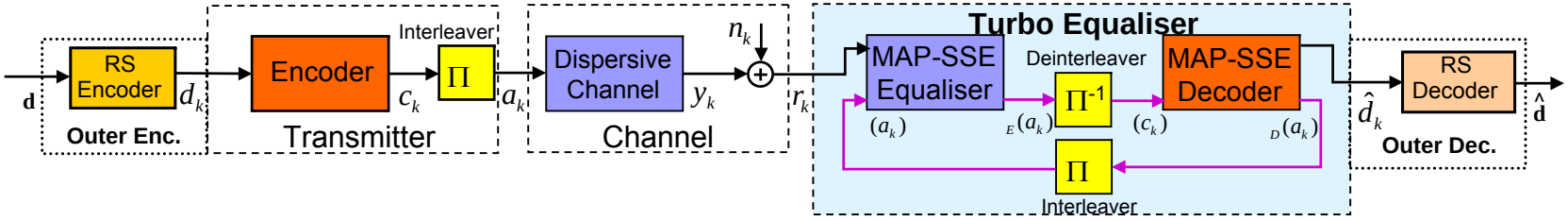

- Soft-input / soft-output maximum a-posteriori symbol-by-symbol estimator (MAP-SSE)
- Feedback of extrinsic information Λ (estimated symbol reliabilities excluding a-priori information)
- Remove correlations: interleaver Π, deinterleaver Π^{-1}
  = pseudo-random permutation of bit positions

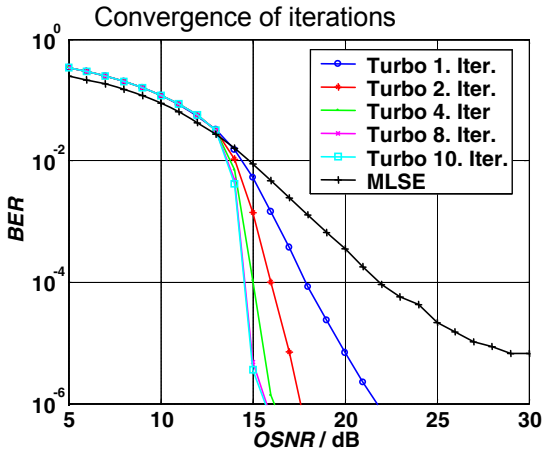

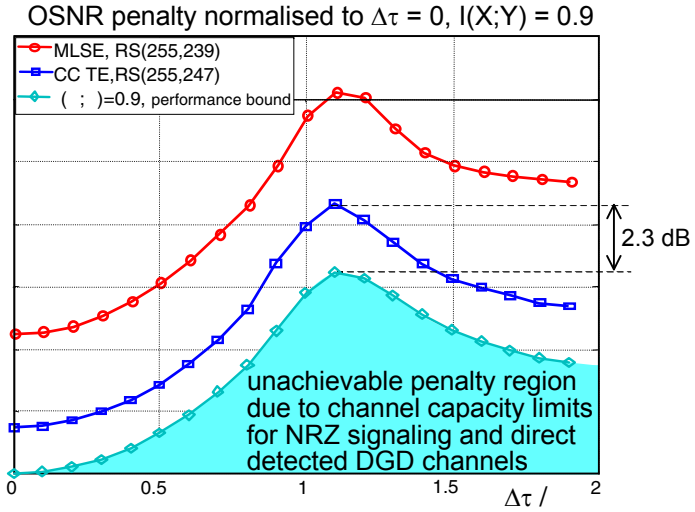

TE with Low-Density Parity-Check (LDPC) Codes

Block coding

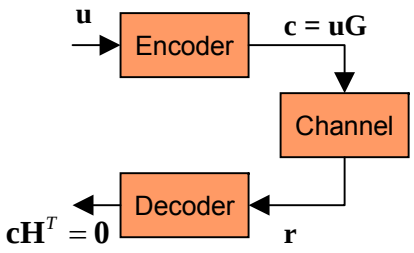

Parity-check matrix

$$\mathbf{H} = \begin{matrix} 1 & 1 & 0 & 0 & 1 & 0 & 1 & 1 \\ 0 & 1 & 1 & 0 & 1 & 1 & 1 & 0 \\ 0 & 0 & 1 & 1 & 1 & 1 & 0 & 1 \\ 1 & 0 & 0 & 1 & 0 & 1 & 1 & 1 \end{matrix}$$

Tanner graph

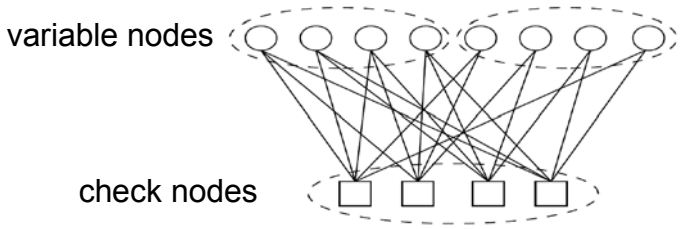

- Block code defined by sparse parity-check matrix or by Tanner graph
- Near Shannon limit performance for large codes (n >> 1000)
- Soft-decision soft-input decoding algorithms: "*Belief Propagation*", "*Sum-Product*",...
- Arbitrary code rate, code design tools, efficient encoders,...
- LDPC codes combined with equalisation → TE

BER performance, R = 0.5, n = 10^6, AWGN channel

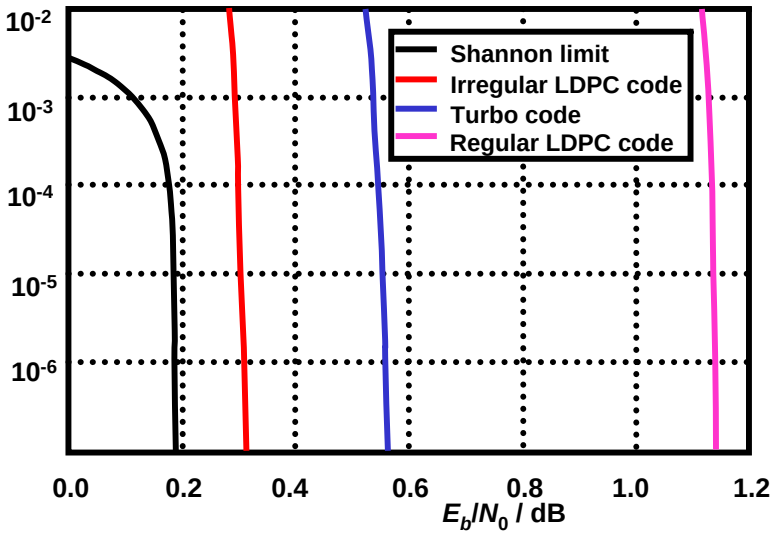

Richardson, Shokrollahi, Urbanke, IEEE Trans. Inform. Theory, Feb. 2001

Gap to Capacity Limit

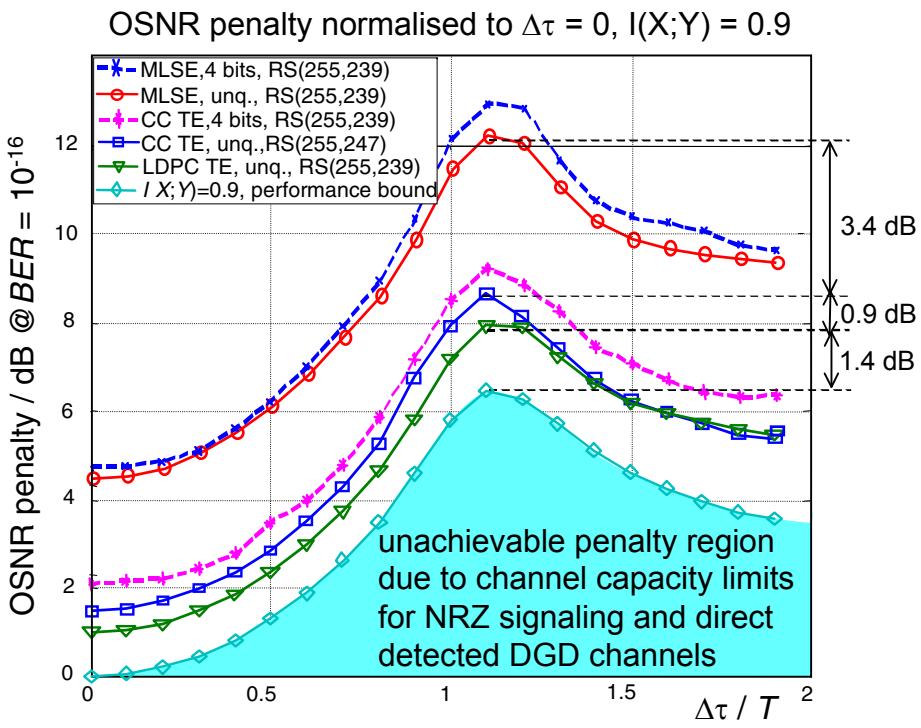

Typical OSNR gap to channel capacity

- MLSE + RS(255,247): ≤ 4.5 … 6.1 dB
- CC-TE + RS(255,247): 1.8 … 2.8 dB
- LDPC-coded TE + RS(255,247): 0.9 … 1.5 dB
- LDPC-coded TE + RS(2720,2636): 0.7 … 1.3 dB

Approach: Coherent Detection and OFDM

Optical Orthogonal Frequency Division Multiplexing (OFDM)

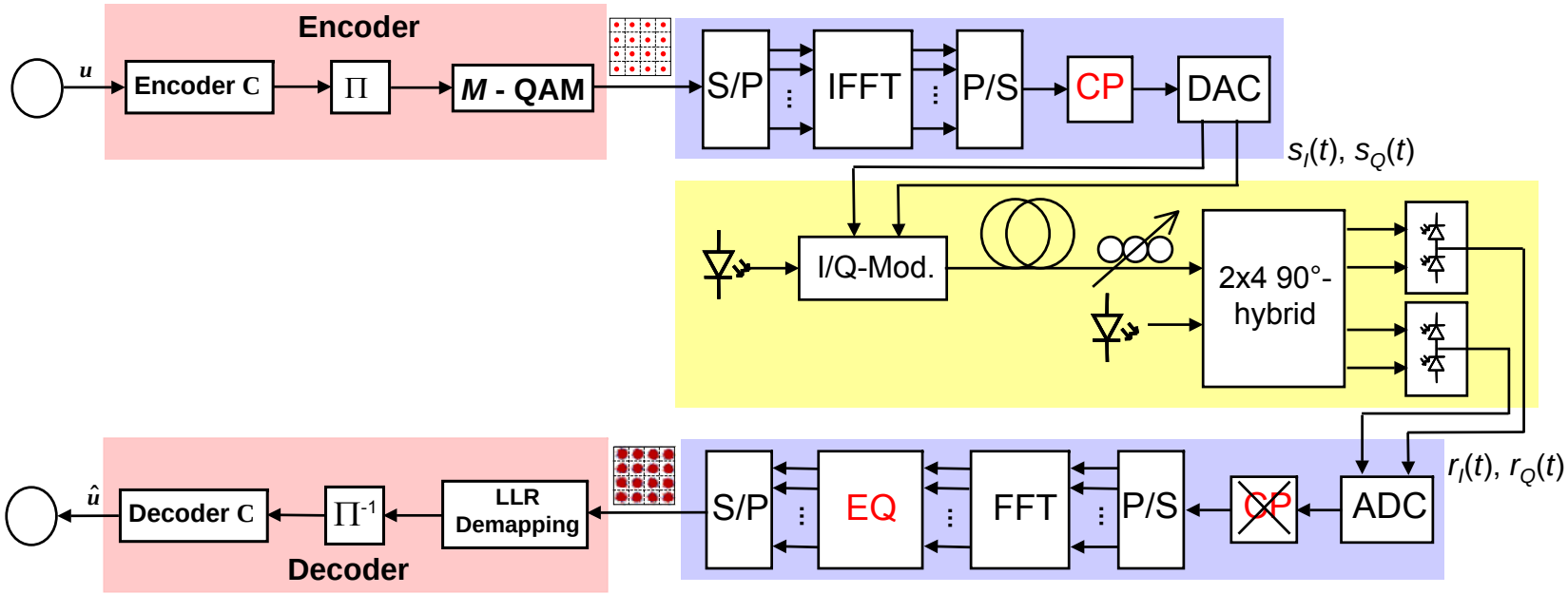

- Parallel transmission by a large number of OFDM sub-carriers (64....1024)
- Coherent system; frequency and channel estimation by pilot symbols
- Multi-level modulation (*M* - QAM)
- Polarisation multiplex (PolMUX)

MIMO Optical OFDM and Equalisation

- Polarisation multiplex = 2 x 2 multiple input / multiple output (MIMO) system
- Bit interleaved coded modulation (BICM) on OFDM sub-carriers

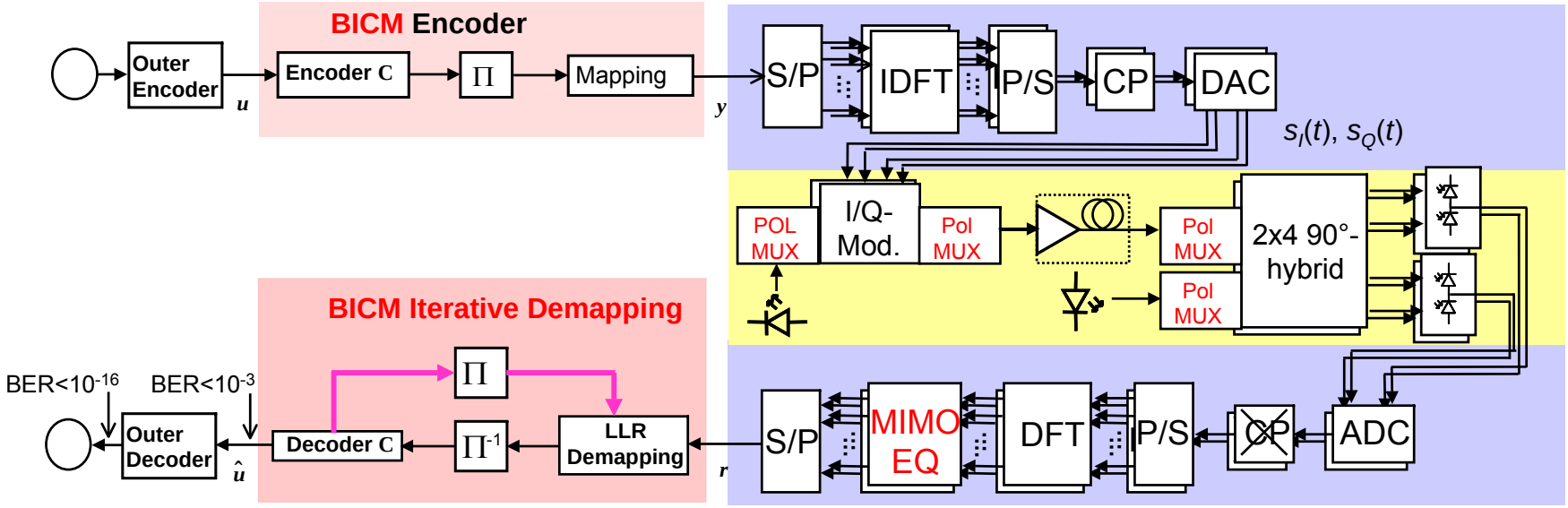

- PMD: MIMO receiver = 2x2 matrix per sub-carrier
- CD: DCF, OFDM pre-distortion or OFDM equaliser
- QAM: Iterative demapping and decoding of BICM
- Performance limitation by SPM/XPM and ASE noise, loss due to guard interval

Conclusions

- Channel capacity constraints: OSNR penalty
- TE outperforms Viterbi equalisation and decoding
- About 1 dB gap to mutual information limit

- Approach to decrease mutual information limit:
  - coherent technique
  - multi-level modulation
  - polarisation multiplex
  - optical OFDM

- **References:**

- W. Sauer-Greff and R. Urbansky, "Iterative Equalization and FEC Decoding in Optical Communication Systems: Concepts and Performance," *Optical Fiber Conference (OFC)*, paper OThO1, 2008.
- H. Haunstein, T. Schorr, A. Zottmann, W. Sauer-Greff and R. Urbansky, "Performance Comparison of MLSE and Iterative Equalization in FEC Systems for PMD Channels With Respect to Implementation Complexity," *J. Lightwave Technol.,* vol. 24, pp. 4047-4054, 2006.