PLC-based integrated devices for advanced modulation formats

Y. Inoue
NTT Photonics Labs.
NTT Corporation

Hybrid integration of photonics & high speed electronics

- Telecom traffic keeps growing *1.4 times per year in Japan*
  - ✓ Broadband access, video service, etc.
- Need to improve spectral efficiency due to limited bandwidth
- Advanced formats are studied
  - ✓ DQPSK, DP-QPSK, QAM
- Issues :
  - ✓ **"Complicated" and "large-size" photonic devices**
  - ✓ **High-speed parallel electrical wirings**
- Approach :
  - Hybrid integration of photonics & high speed electronics
    - ✓ Tx : Light-source, driver, modulator
    - ✓ Rx : Local oscillator, 90-deg. Hybrid, PD, TIA

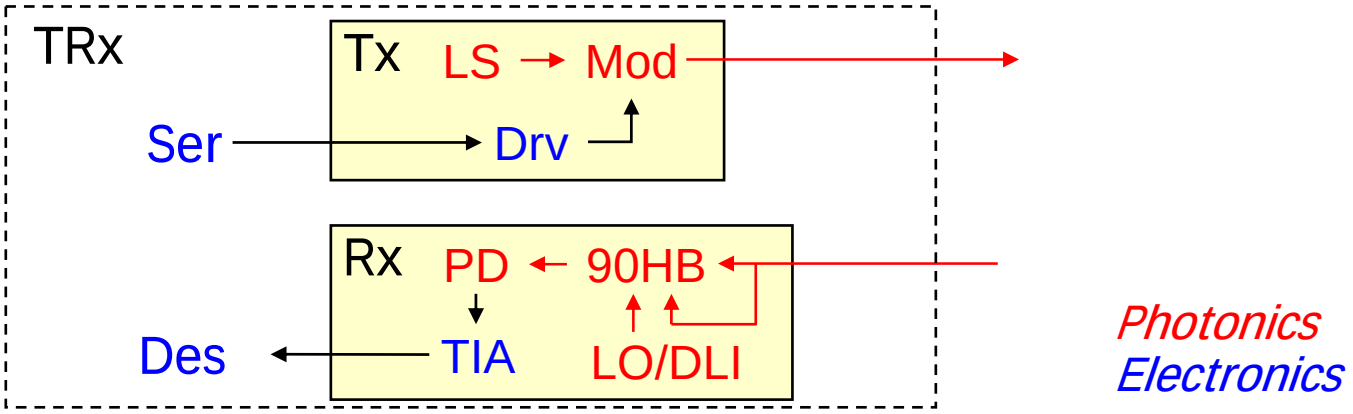

Silica PLC (planar lightwave circuit)

- Advanced formats need lightwave functions
  - ✓ Coupler, delay line, PBS, pol. rotator, wavelength multiplexer

- Silica PLCs are suitable for their hybrid-integration
  - Pros
    - ✓ Mass producible, High reliable (optical splitter, AWG)
    - ✓ Tunable with TO phase shifter (VOA, switch)
    - ✓ Various passive circuits (coupler, PBS, pol. rotator, DI, MUX)
    - ✓ Easy horizontal development
      - Once you established PLC hybrid assembly, you can easily develop other functional devices by replacing the PLC only.
  - Cons
    - ✓ Large in size compared to monolithic approach
    - ✓ Passive function only

PLC-LN Hybrid-assembly Modulator

PLC-LN hybrid assembly modulator

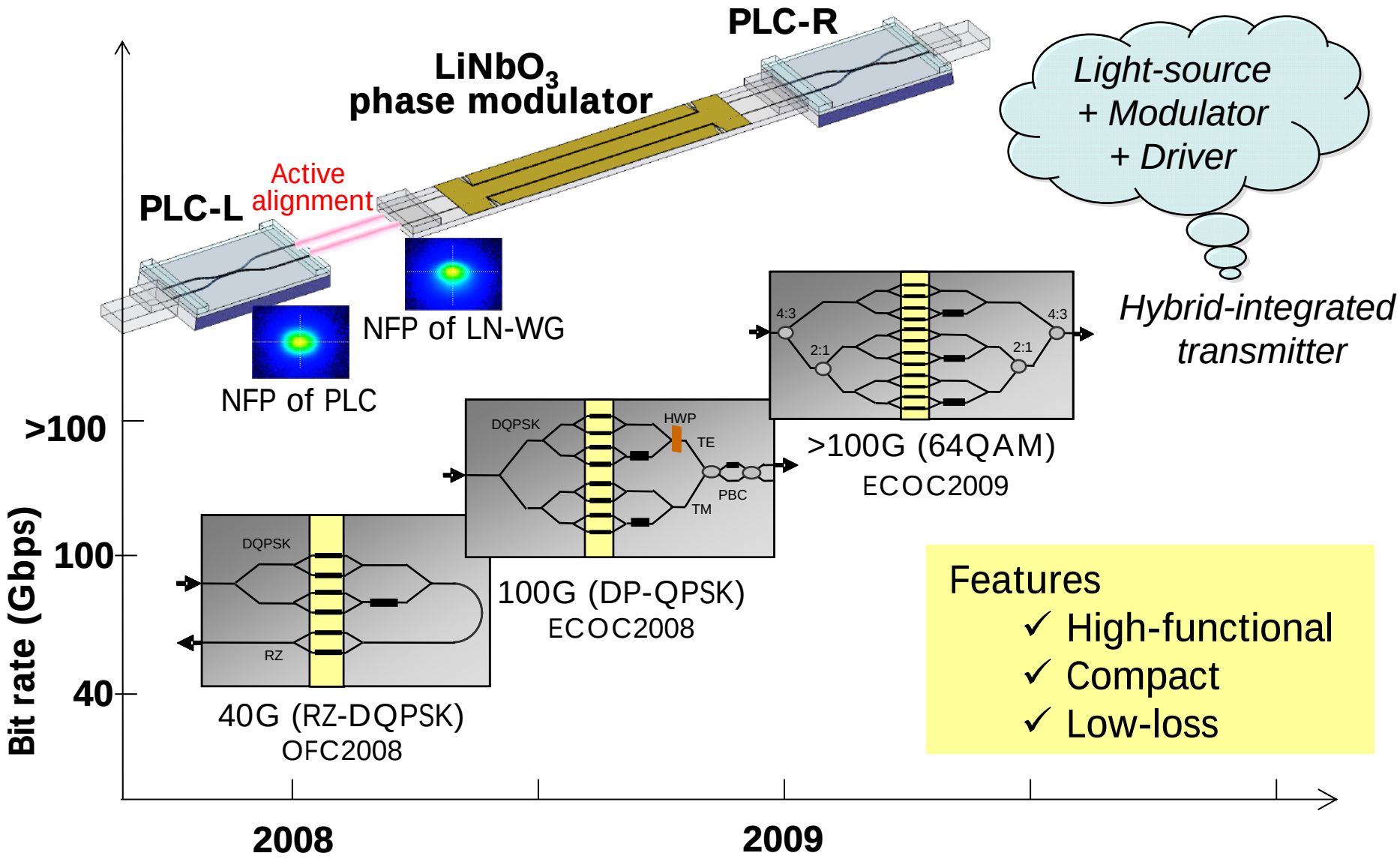

Features
- ✓ High-functional
- ✓ Compact
- ✓ Low-loss

40 Gb/s RZ-DQPSK modulator

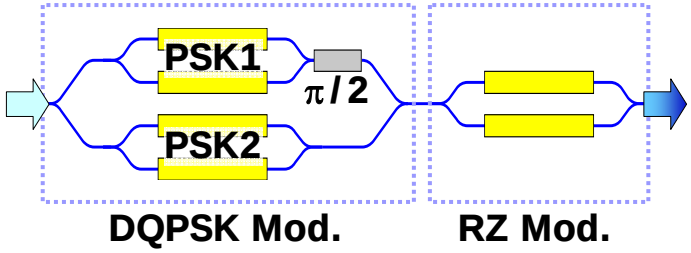

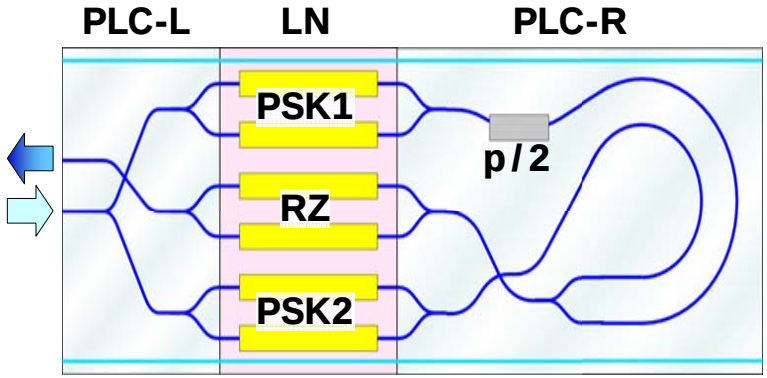

Single side input/output by U-turn waveguide

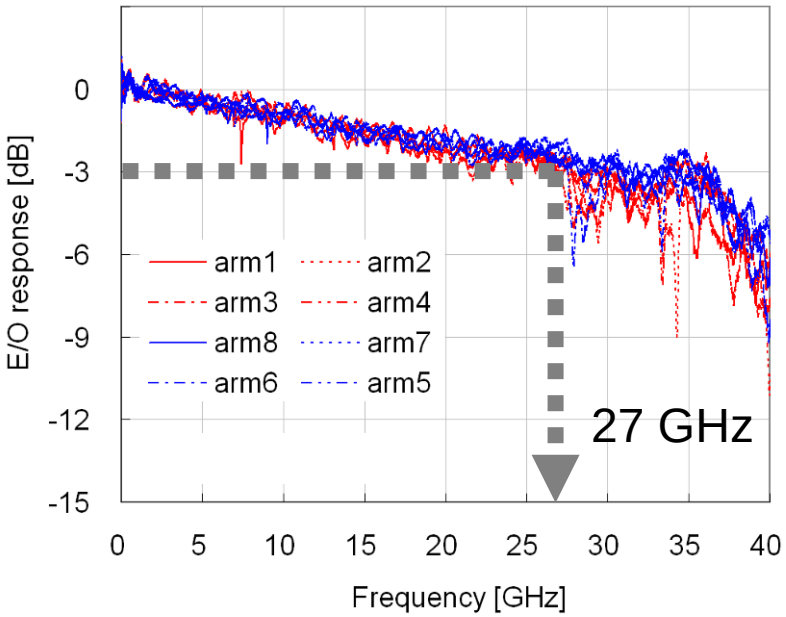

Module size:	W18.3×L97.0×H7.8mm
Insertion loss:	6 dB
Extinction ratio:	25 dB
Vπ:	5 V

100 Gb/s DP-QPSK modulator

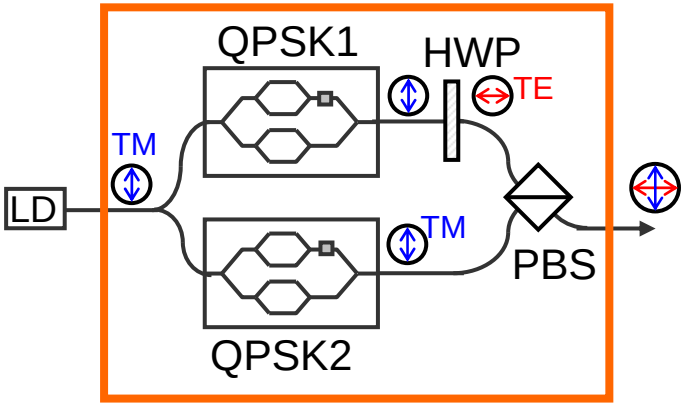

HWP: Half-wavelength plate
PBS: Polarization beam splitter

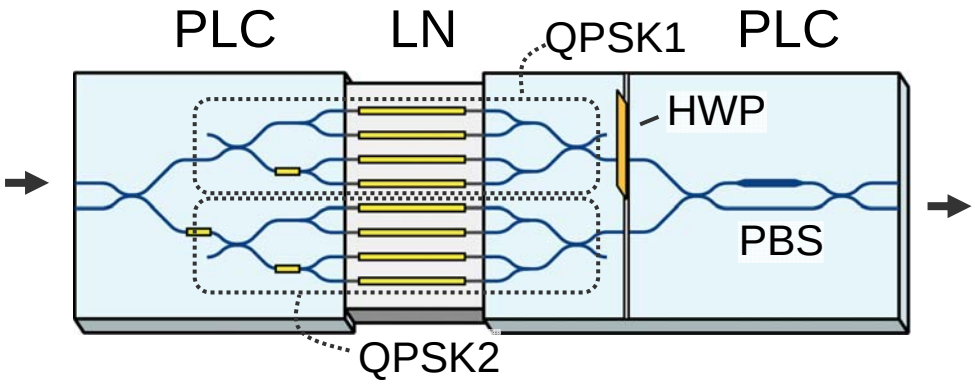

- QPSK mod. x 2 + PBS
- Low insertion loss: 4.8 dB
- 100-Gb/s (25-Gbaud) operation

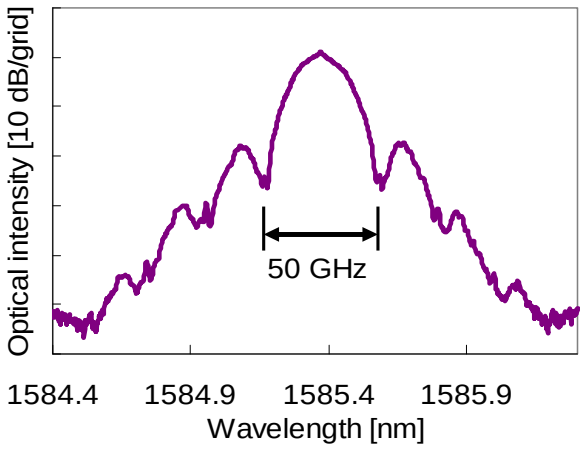

H. Yamazaki et al., ECOC'08, Mo.3.C.1

Binary-drive 64QAM Modulator

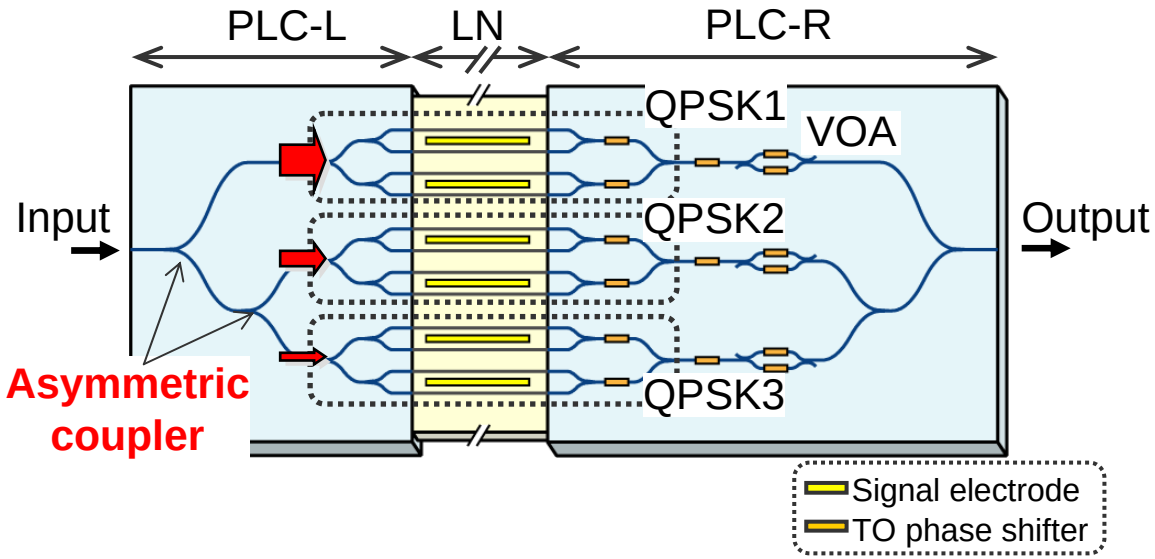

Package: 146.0 x 18.7 x 11.0 mm

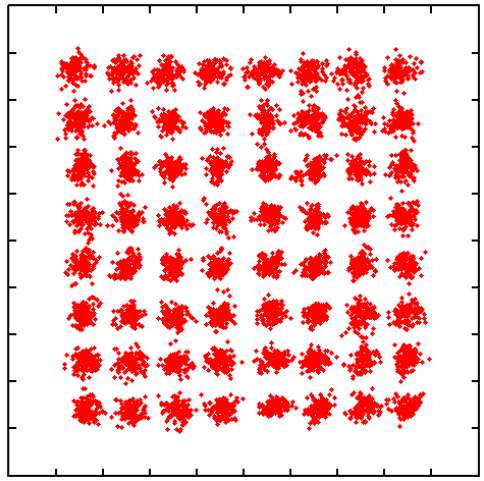

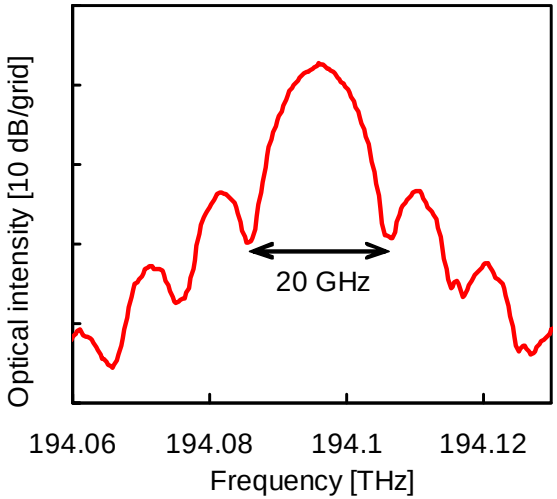

Clear constellation w/o EQ. (BER = 7.8 x 10^{-4})
Signal BW = 20 GHz : 1/3 the bit rate
Insertion Loss = 5.5 dB

To be presented in 2.2 (Mon 16:15) by H. Yamazaki

PLC-based Receiver Front-End

Technology Roadmap for High-speed Receiver FE

using PLC Demodulator and Balanced OE

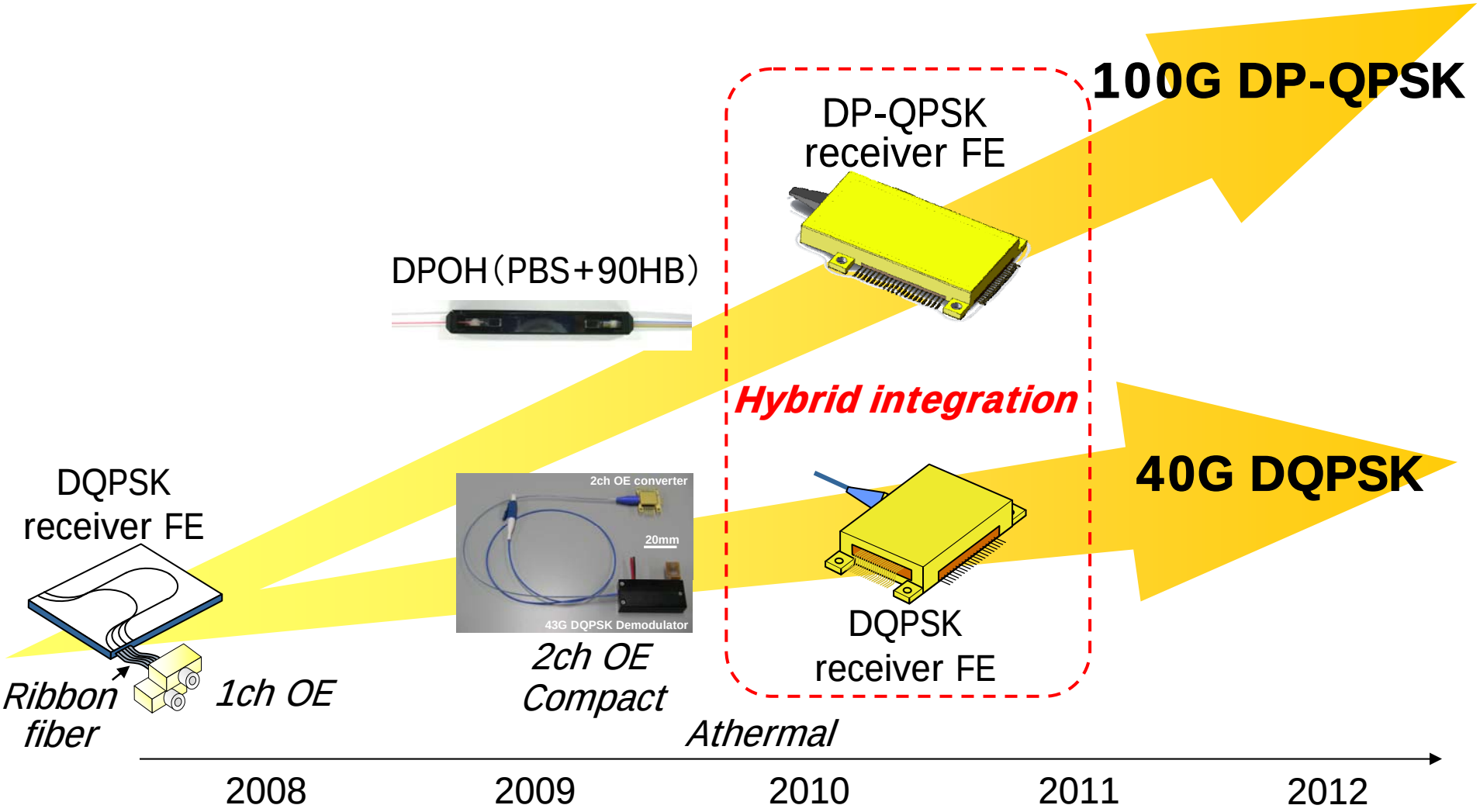

Approach : PLC demodulator + Balanced-OE

40 Gb/s DQPSK Receiver Front-End

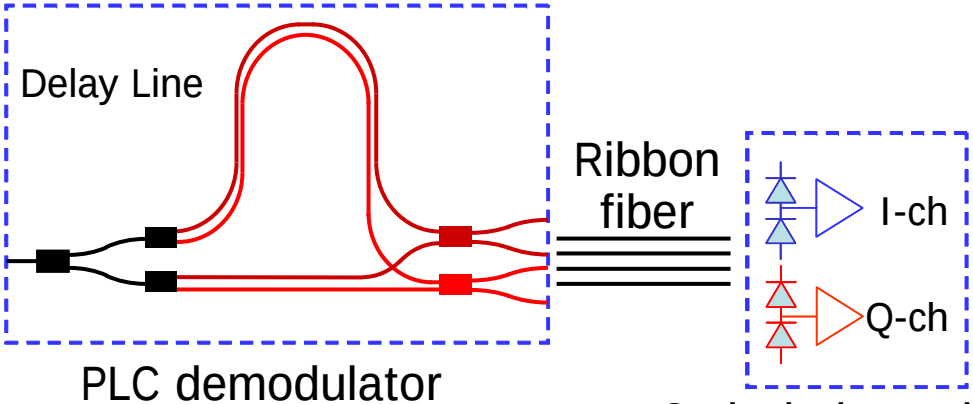

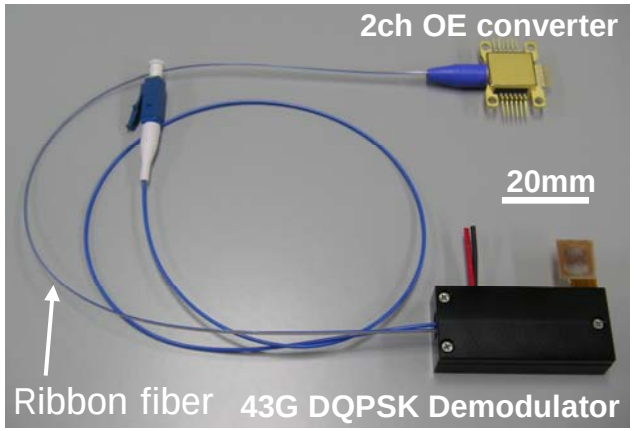

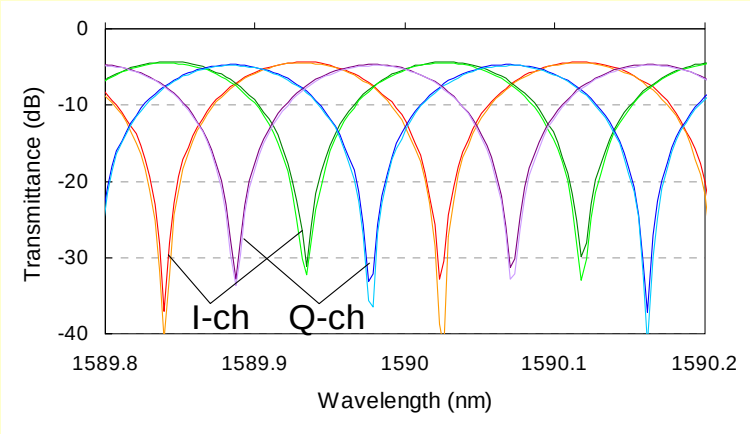

PLC demodulator
- ✓Compact
- ✓Fast optical phase tuning
- ✓Small PDf

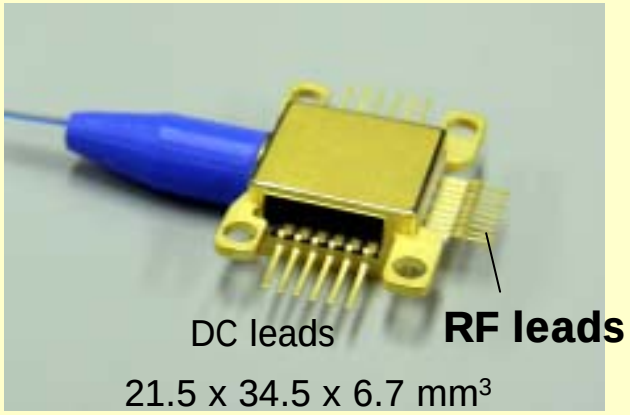

- ✓ 2 sets of balanced-PD and TIA/AGC
- ✓ **RF leads instead of GPPO connectors**

T. Furuta, ECOC 2008 P.2.13

Dual Pol. 90-deg. Optical Hybrid (DPOH)

for Digital Coherent Receiver

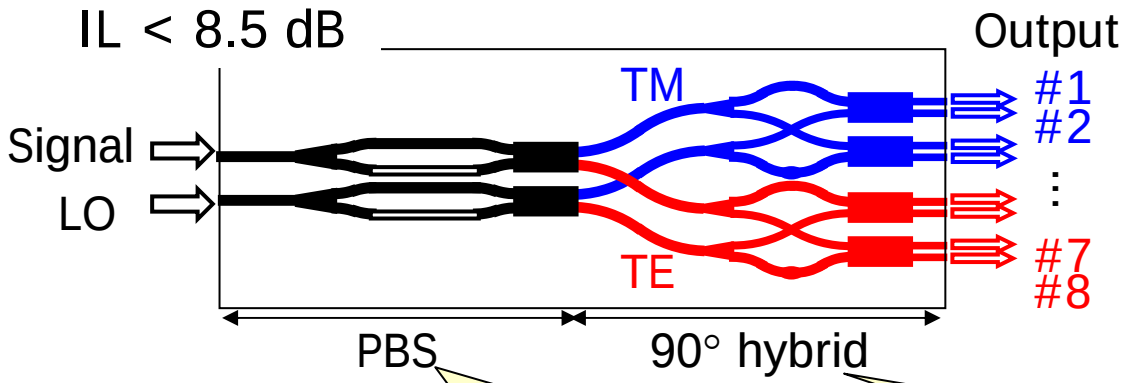

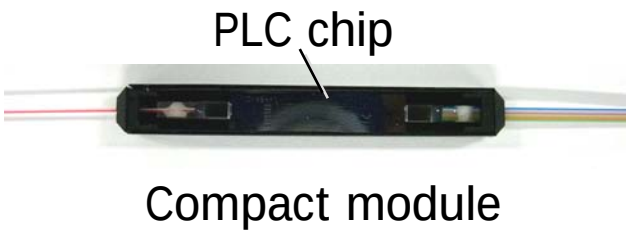

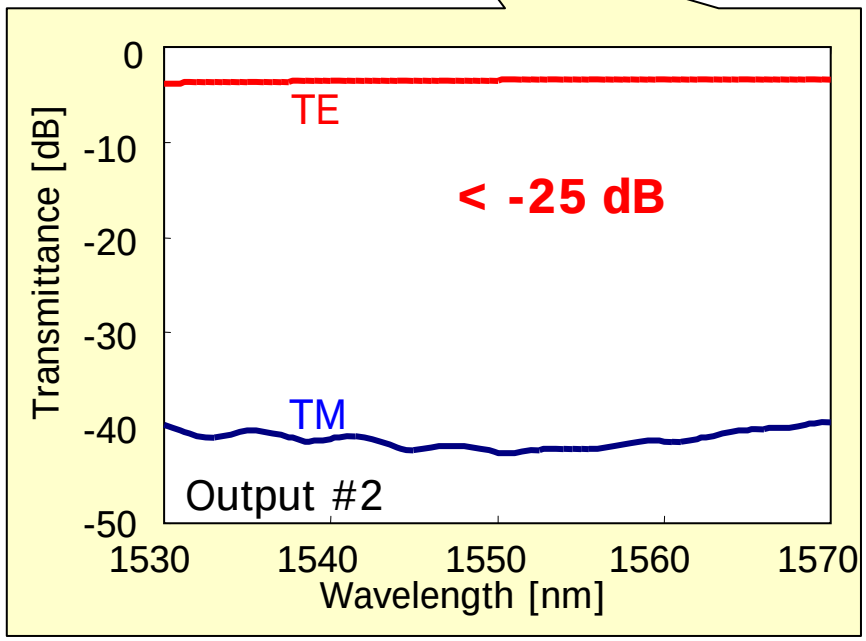

Transmittance spectra of PBS

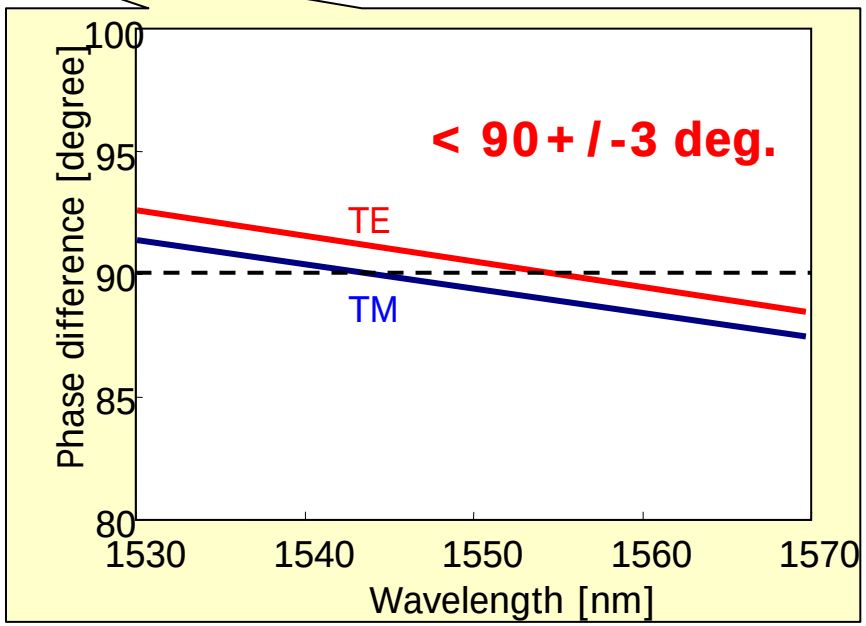

Phase difference between I and Q channels

To be presented in 2.2 (Mon 17:30) by Y. Sakamaki

NTT

Summary

- PLC-based hybrid integration is a promising approach to realize high-functional devices for advanced modulation formats

- Feed-through RF pins is one of the solution for high speed parallel electrical wirings.

Thank you