ThalesAlenia Space
A Thales / Finmeccanica Company

Microwave Photonic Technologies for Flexible Satellite Telecom Payloads

M. Sotom, B. Bénazet, A. Le Kernec, M. Maignan

THALES

European Conference on Optical Communication, Sept. 20 – 24, 2009, Vienna, Austria

Contents

- Introduction
- Telecom satellites and payloads
- Optical handling of microwave signals
  - Optical distribution of local oscillators
  - Optical frequency conversion
- Examples of Opto-microwave telecom payload
  - Flexible payload
  - Photonic antenna subsystems
- Conclusion

Introduction

What is a space system ?

- **A Space System is composed of**
  - a space segment: one or several satellites
  - a launcher
  - a ground segment: Mission and Satellite Control Center(s)
- **The Satellite is composed of**
  - a Payload which supports the functionalities of the mission
  - a Platform which supports and operates the Payload (powering, pointing, thermal management, telemetry / telecommand …)
- **The Telecom payload is composed of**
  - antenna sub-system
  - repeater sub-system

What are the main challenges ?

- Cost
- Reliability : 15 years in orbit (130 000 hours)
- Mass
- Harsh space environment: thermal, vacuum, radiation, vibration & shock (launch)

Telecom satellites & payloads

Conventional telecom missions

- Global (or a few) coverage
- Fixed routing from uplink to downlink accesses
- Transparent RF payloads
  - Mostly C (6/4 GHz) , Ku (14/12 GHz) bands
  - Capacity: some Gbps
  - “bent-pipe” repeater concept
  - Low noise amplification
  - Frequency conversion
  - Demultiplexing / Filtering
  - High-power amplification

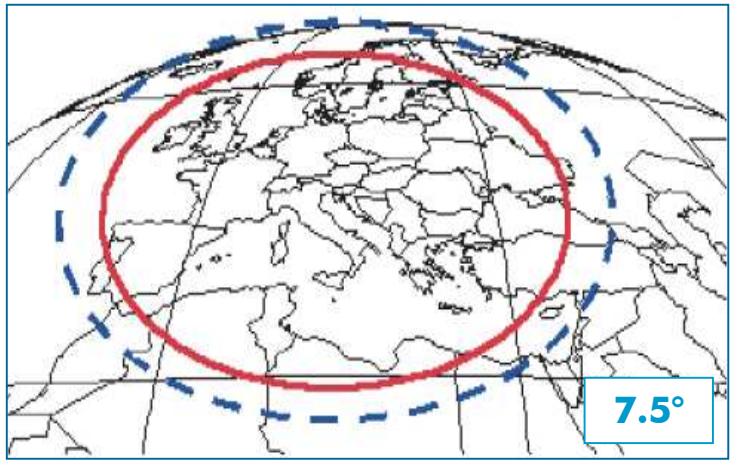

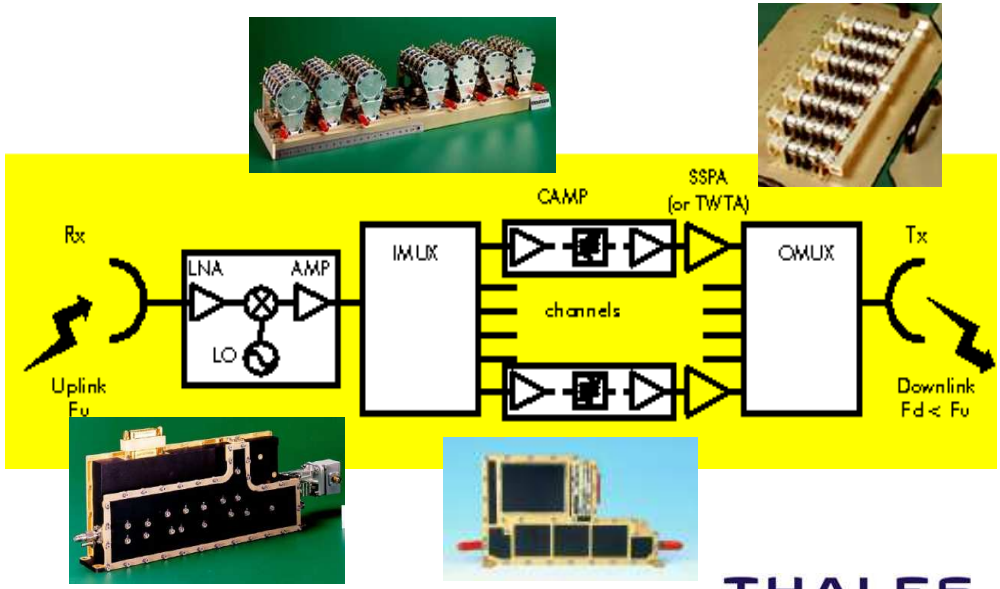

Future broadband telecom missions

- Evolution driven by Multimedia / IP
  - interactivity in broadcast systems
  - bidirectional links: gateways/users & users/users
- Bandwidth increase & lower “transmitted bit” cost
  - migration to Ka-band (30 GHz / 20 GHz)
- New generation of high-directivity, multi-beam antennas
  - cellular coverage with frequency reuse
  - > 100 spots for global coverage
- Flexible payloads required
  - on-board switching for flexible beam-to-beam connectivity
  - versatile and transparent solutions (15-years)

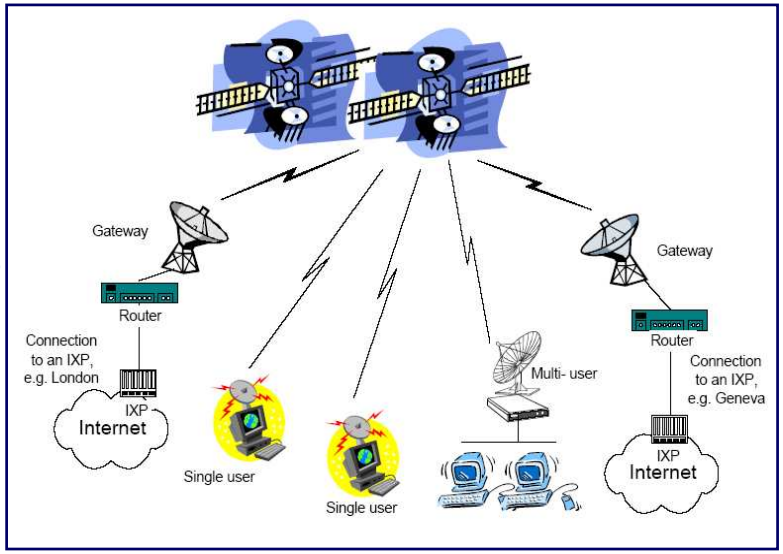

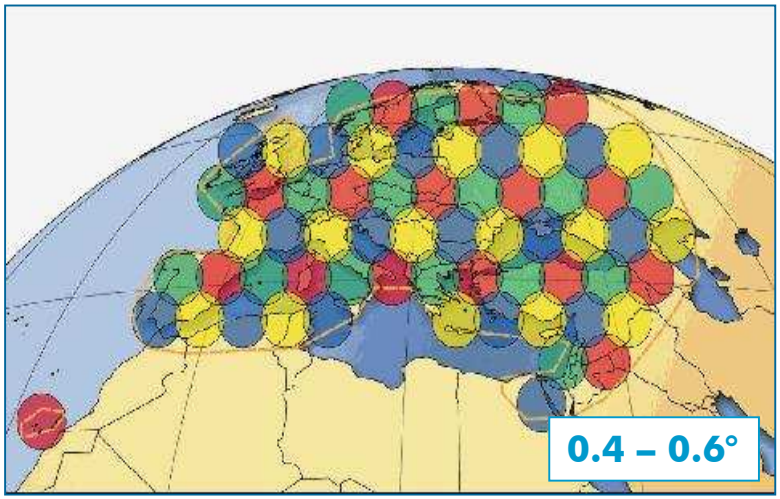

Future broadband telecom payloads

- flexible, complex payloads : coverage, connectivity, frequency plan, bandwidth allocation …
- > 100 RF channels (10's of MHz) over 10's of antenna beams
- critical requirements in terms of mass, volume & power consumption
- future-proof solutions = transparent payloads (analogue or digital)

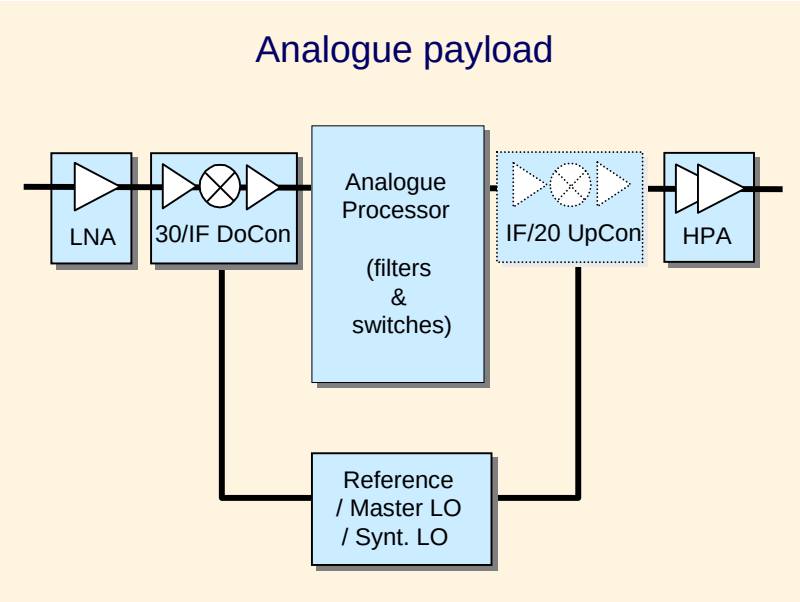

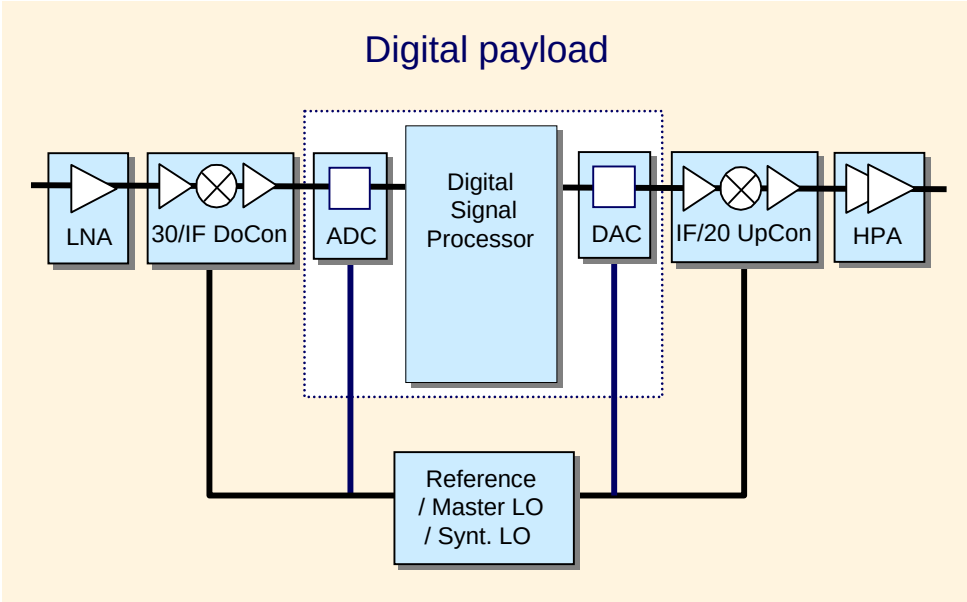

Photonic technologies

Potentials of photonic & µ-wave photonic technologies

- low mass and small size
- broad bandwidth
- RF isolation, suppression of EMC/EMI issues
- transparency to RF frequency
- multiplexing (WDM)

On-board applications

- LO delivery
- frequency mixing
- RF signal routing
- hi-throughput digital interconnects

…

SIGNAL HANDLING FUNCTION \ APPLICATION	Analogue repeater	Digital processor	Antenna
LO generation	➡		➡
Reference / LO distribution	➡	➡	➡
Signal distribution & switching	➡		
Frequency mixing	➡		➡
Amplitude / phase control			➡
Fast sampling		➡	

Microwave photonic building blocks

Optical LO distribution

- optical LO source
  - SC laser modulation (MHz to GHz)
  - laser + EO modulator @ high frequency
- SMF splitters, tree-like optical network

Applications : all (analogue/digital) payloads

- mass savings, small size
- RF isolation, EMI free
- broad bandwidth, scalability …

Major achievements

- Optical distribution of USRO @ 10 MHz and MLO @ 800 MHz
- LO optical generation & distribution @ > 20GHz Double Side-Band with Carrier Suppression (DSB-CS)

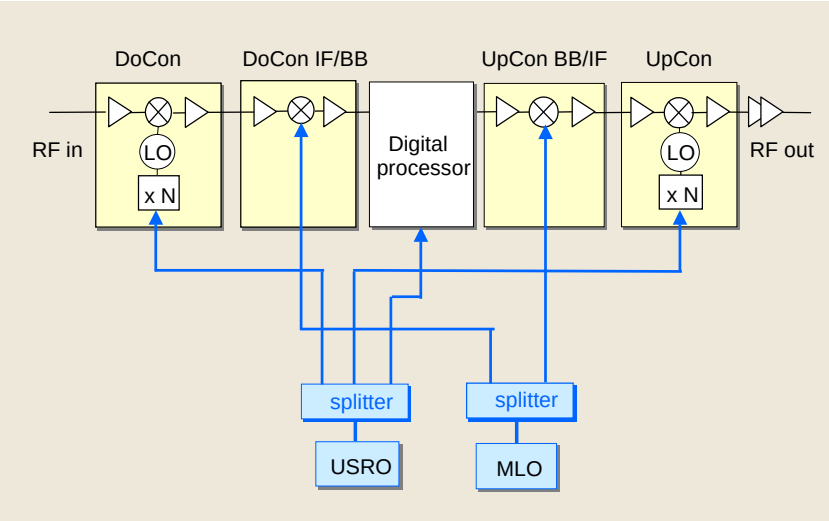

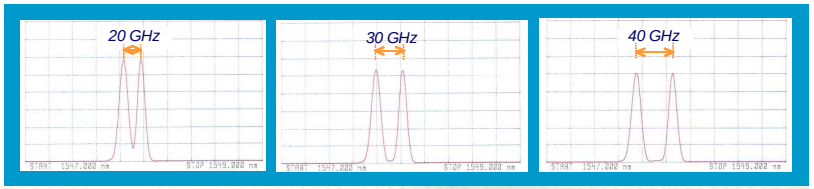

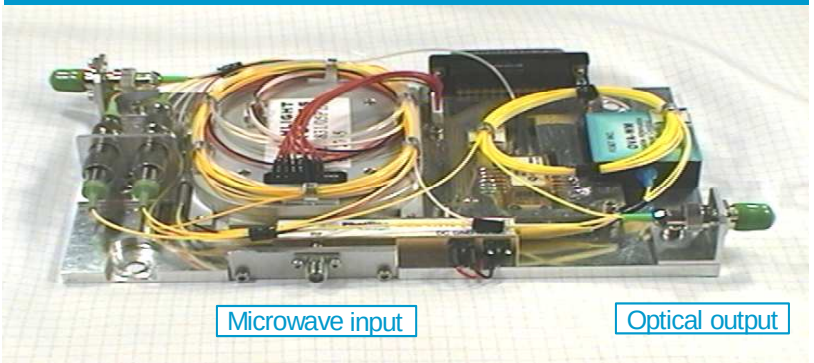

Photonic RF frequency mixing

- based on mixing properties of Mach-Zehnder Electro-Optical Modulator
- together with bandpass O/E Rx, centred @ IF
- demonstrated with high IF/LO & IF/RF isolation
- RF gain & NF ~ compatible with overall design > low-drive, low-loss EO modulator

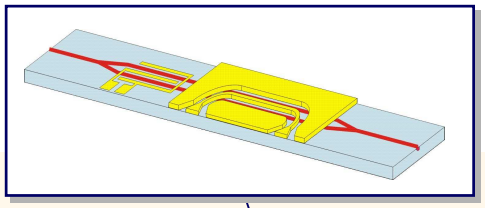

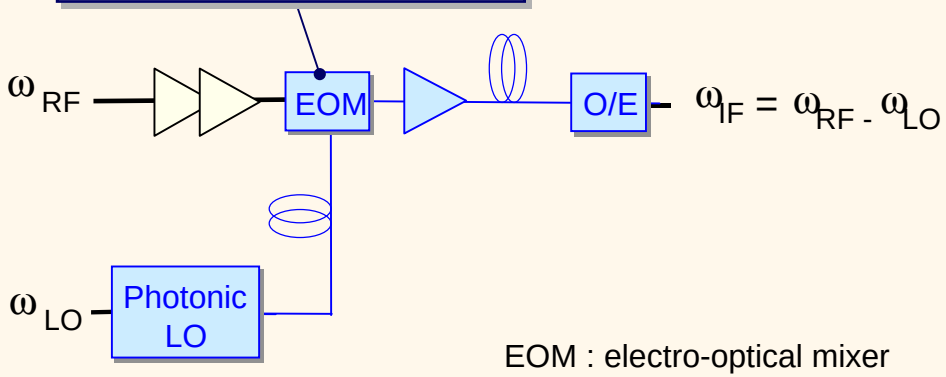

EOM : electro-optical mixer
O/E : opto-electronic receiver

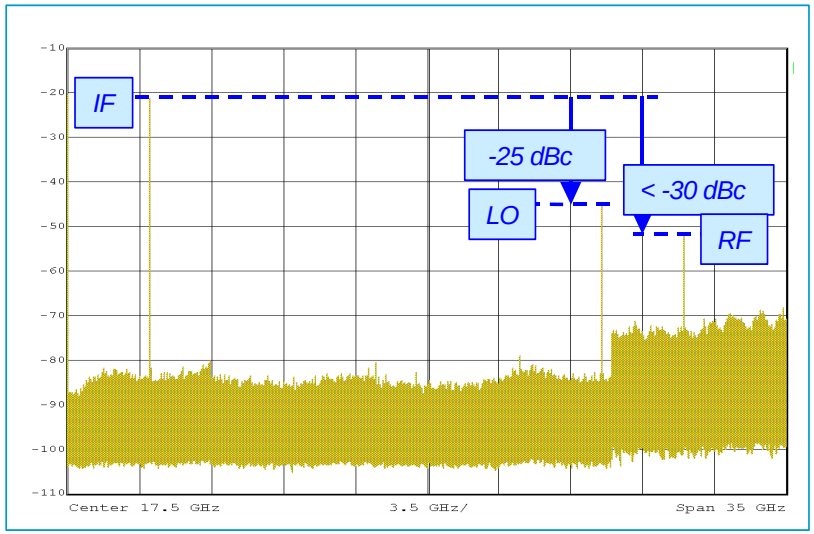

Flexible MW photonic repeater

MWP repeater concept (ESA project)

- RF amplification and filtering
- optical distribution of centralised LO's
- optical (multiple) frequency-conversion
- optical X-connection of µ-wave channels

Merits

- flexible beam-to-beam connectivity
- broadband, frequency-independent design
- scalable to large sizes
- low mass & volume, power consumption

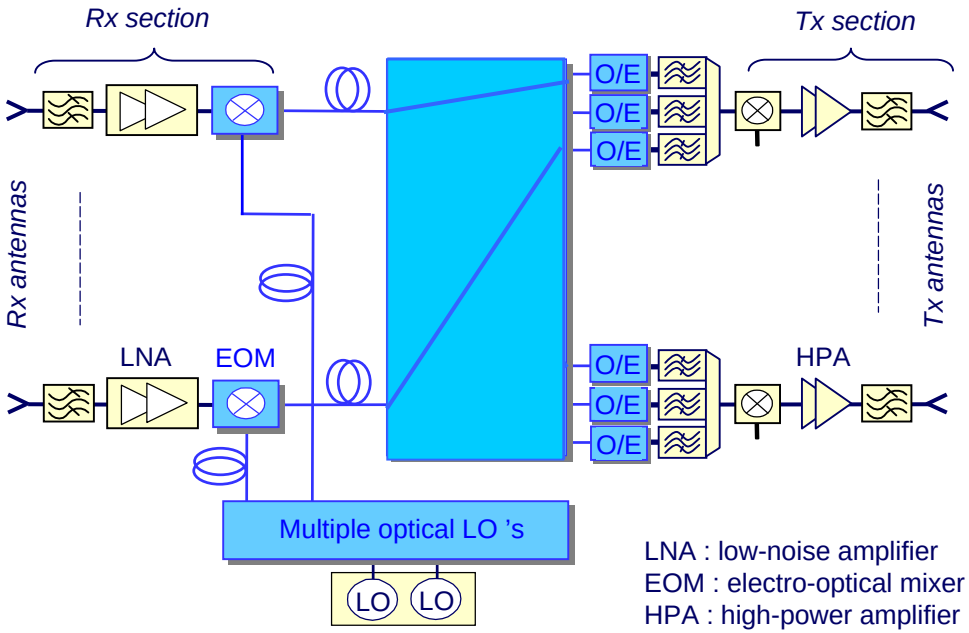

LNA : low-noise amplifier
EOM : electro-optical mixer
HPA : high-power amplifier

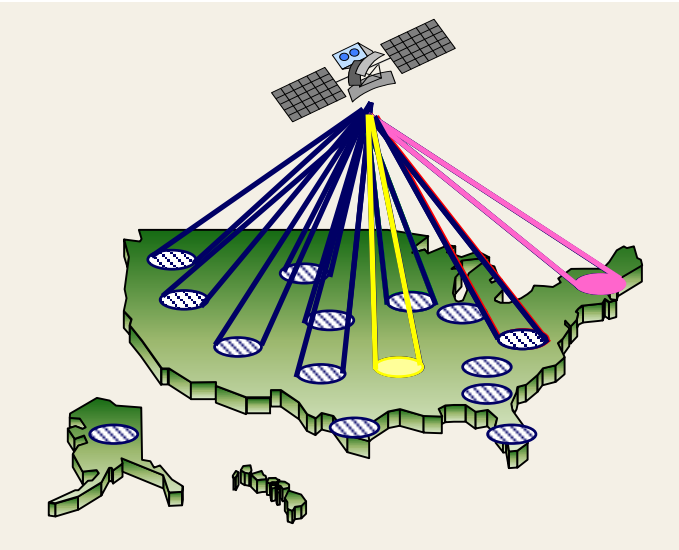

Flexible MW photonic repeater

Breadboard repeater demonstrator (ESA project)

- sub-populated, yet representative of full-scale repeater system
- Ka-band (30 to 4 GHz)

① Microwave Photonic LO source

② Photonic frequency-mixer

③ 4x4 MEMS-based optical cross-connect

④ Microwave opto-electronic receivers

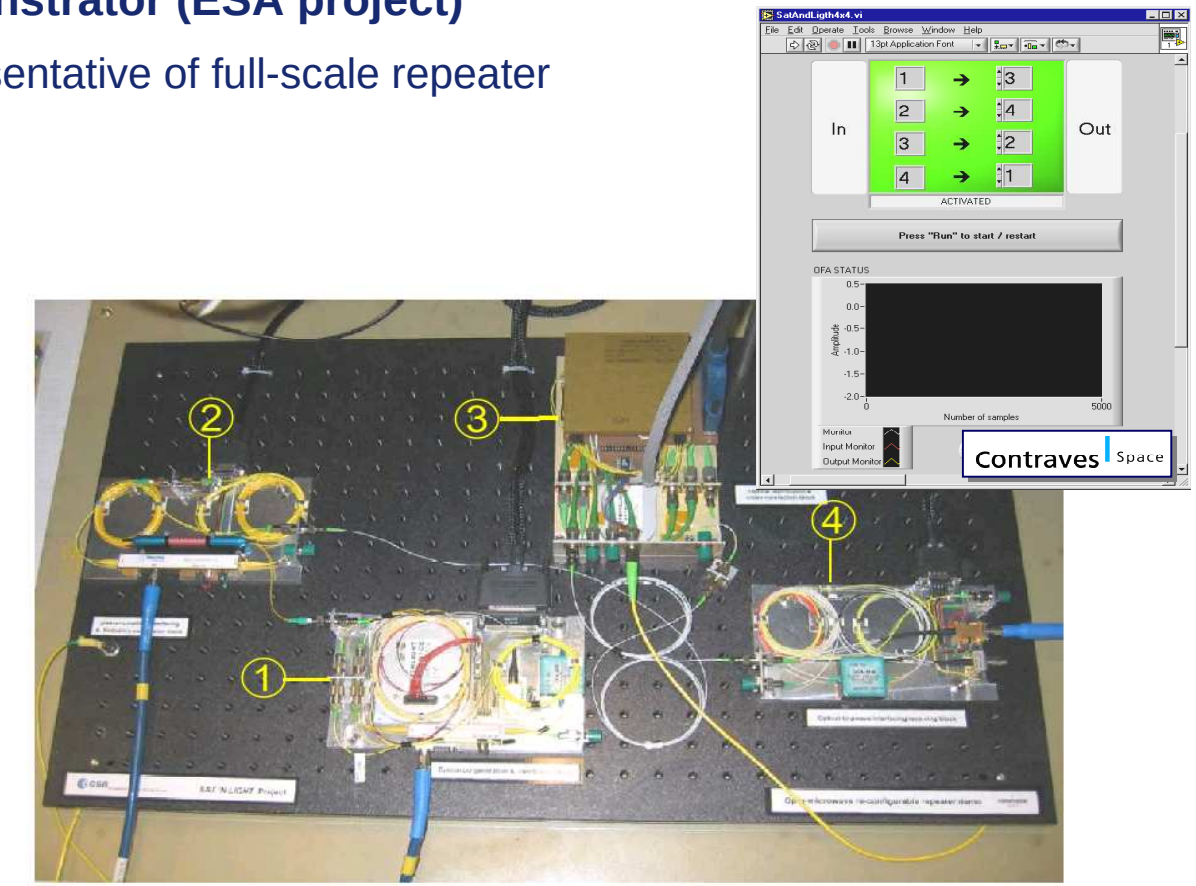

Flexible MW photonic repeater

Large, 3D Optical MEMS switches (ESA project)

- partnership with SERCALO (CH) : to develop a 50x50 switch demo
- array of I/O fibres and collimators, array of (MEMS) micro-mirrors with 3D steering
- complexity grows as 2.N, can grow to large scales (> 100x100)
- configurable as asymmetric matrices

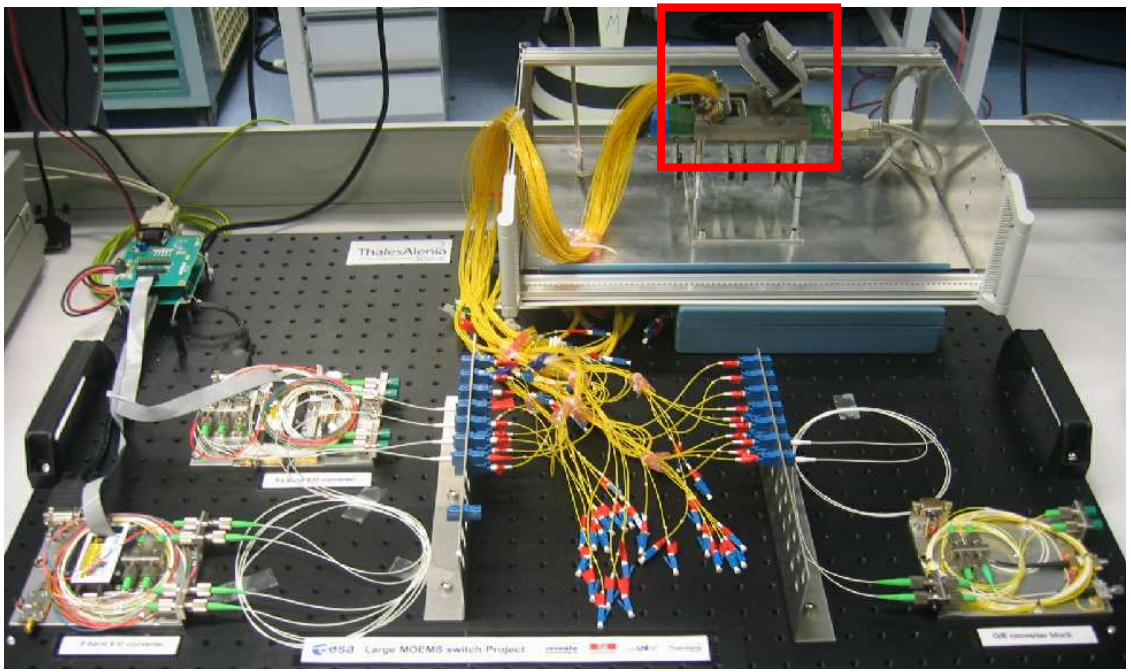

Flexible MW photonic repeater

Optical Multi-frequency Conversion (OMC) (ESA project)

- Wavelength-Division Multiplexing (WDM) of multiple microwave photonic LO's
- mixing an RF signal with multiple LO's in electro-optical modulator
- wavelength de-multiplexing
- conversion to multiple IF signals

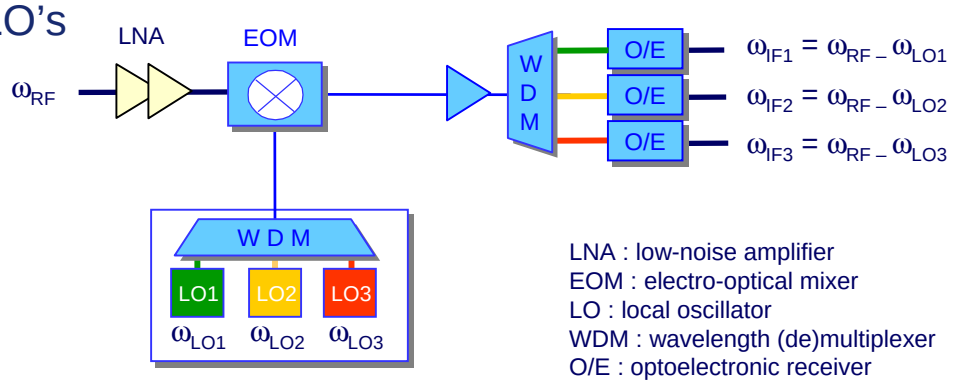

LNA : low-noise amplifier
EOM : electro-optical mixer
LO : local oscillator
WDM : wavelength (de)multiplexer
O/E : optoelectronic receiver

- applications to payload sub-systems
  - routing w/ frequency-slot interchange
  - routing w/ frequency band interchange
  - sub-band demultipexing

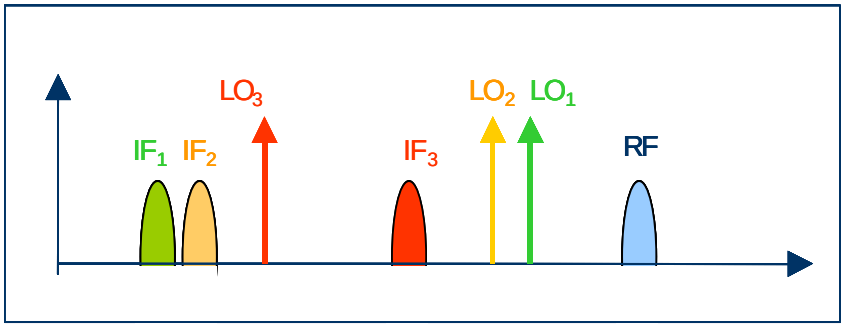

Flexible MW photonic repeater

Optical Multi-frequency Conversion (ESA project)

- Ka (30 GHz) to C (4 GHz) down-conversion
- with 2 LO's, respectively @ 26.00 and 26.04 GHz
- conversion to 2 IF signals with frequency shift
- > 70 dB isolation between IF_1 & IF_2 signals
- no unwanted mixing products

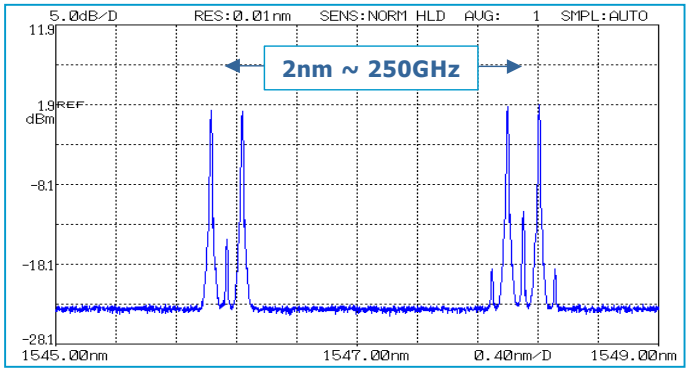

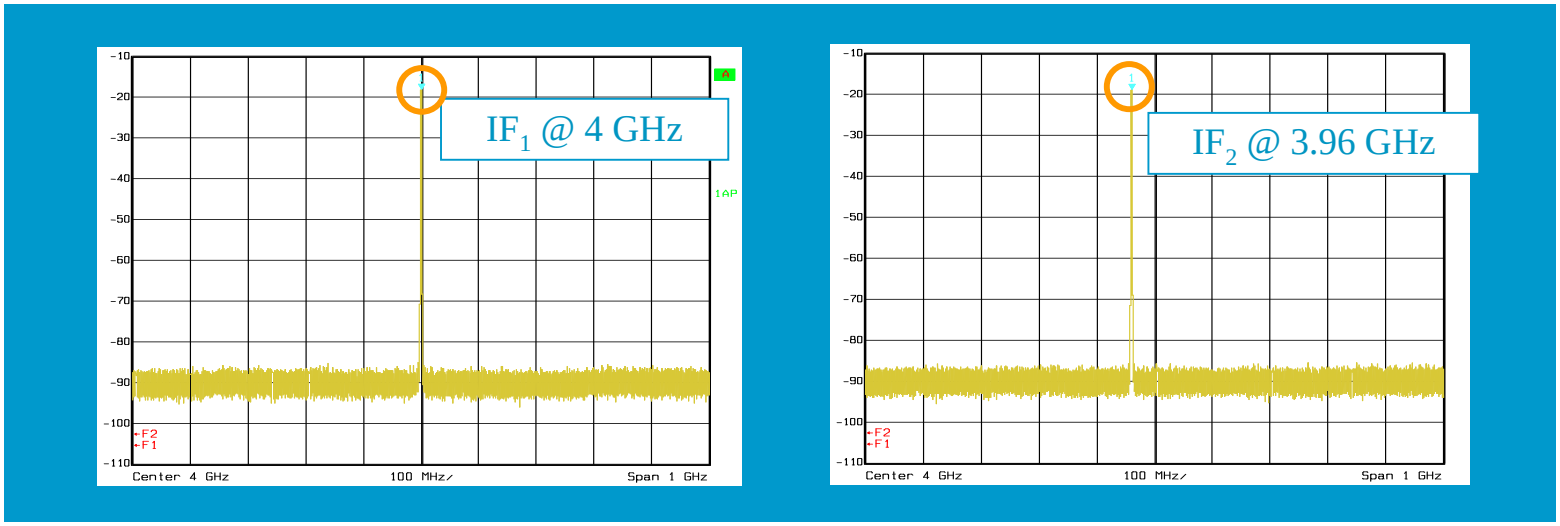

MW photonic antenna sub-systems

Microwave photonic front-end for advanced antennas (CNES project)

- optical LO distribution
- frequency-conversion and IF remoting

Applications to multibeam receive antenna

- e.g. FAFR receive antenna
- with Digital Beam-Forming
- critical requirements on size, mass and dissipation at the antenna element

Major achievements

- Optical front-end architecture study
  - optical LO distribution @ 29 GHz
  - Ka/L frequency down-conversion
  - optical receiver with ADC
- Proof-of-concept & performance assessment

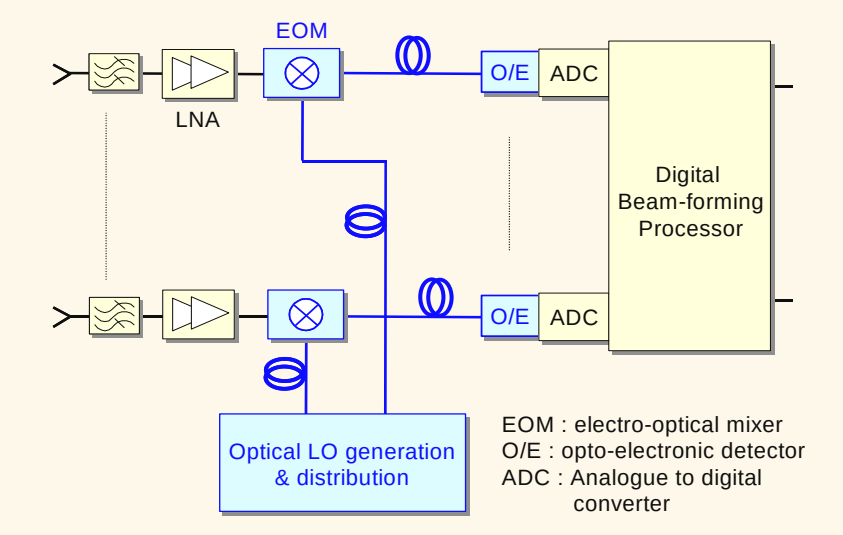

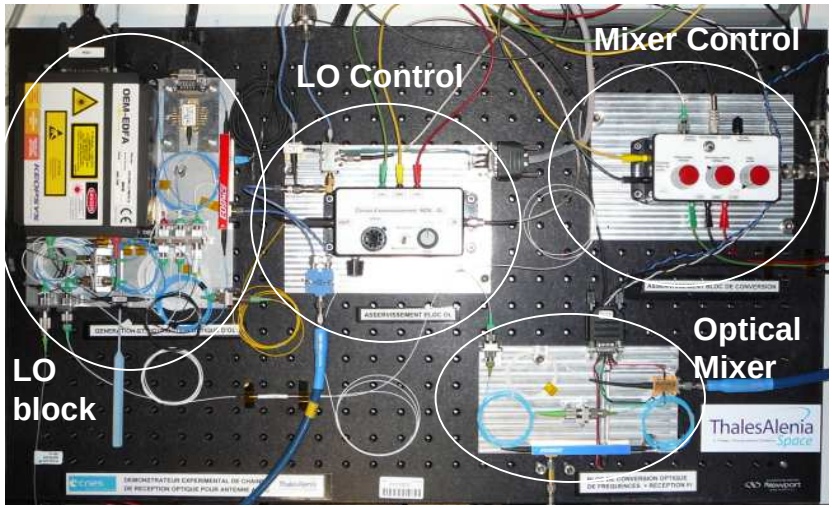

Conclusions

Photonic and µ-wave photonic technologies in future telecom payloads

- for enhancing conventional implementations (mass, density, isolation …)
- as enabling technologies for advanced subsystem concepts

Photonic and µ-wave photonic building blocks

- optical distribution of reference / master oscillators
- optical generation & distribution of high frequency LO's
- optical frequency-conversion
- optical distribution cross-connection of µW signals
- high throughput digital interconnects

...

Proof-of concept demos have confirmed feasibility of sub-systems and proved good RF performance

Further work to improve performance AND integration, bring technology to higher maturity level, and prepare validation in on-orbit technology demos

Acknowledgements

- These works have been performed in the frame of ESA ARTES 5 projects and CNES projects
- The authors would like to thank their partners of these projects
- The authors would like to thank the European Space Agency and the French Space Agency (CNES) for their support during these projects

THANK YOU

Michel.sotom@thalesaleniaspace.com
arnaud.le-kernec@thalesaleniaspace.com